3D PRINTING AND ITS APPLICATIONS

UNIT-3 BINDER JETTING-MATERIAL EXTRUSION & SHEET LAMINATION

Binder Jetting- process, working principle, advantages and disadvantages. Material Extrusion –Fused Deposition Modeling process, working principle, advantages and disadvantages. Sheet Lamination – Laminated Object Manufacturing process, working principle, advantages and disadvantages.

Prepared by

Mr.Sathiyaraj.S AP G-II/Mech,AVIT.

Binder Jetting Process

- Binder jetting is an additive manufacturing process that builds 3D objects by selectively depositing a liquid binder onto a powder bed.
- The binder acts as an adhesive, fusing the powder particles together layer by layer, similar to how inkjet printing works on paper.
- This process allows for the creation of complex geometries and customized shapes using a variety of materials like metals, ceramics, and sand.
- https://www.youtube.com/watch?reload=9&v=Atvhm8-oQks&t=7

Binder Jetting Process

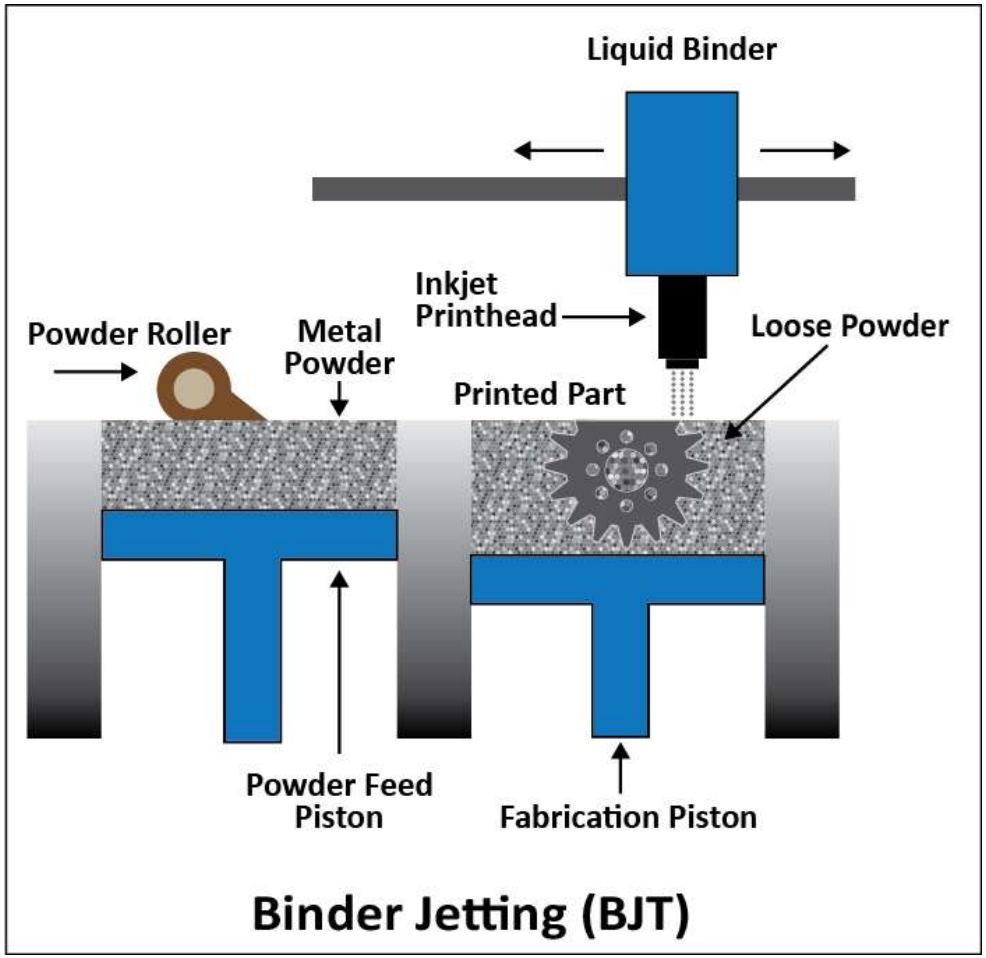

Key Components and Process:

Powder Bed:

- A layer of powder material (metal, ceramic, sand, etc.) is spread across the build platform.

Liquid Binder:

- A printhead selectively deposits droplets of liquid binder onto the powder bed, following a digital design.

Layer-by-Layer Construction:

- The build platform lowers, and another layer of powder is spread, followed by binder deposition. This process repeats until the object is complete.

Green Part:

- The final product after binder jetting is often referred to as a "green part" and is still porous and fragile.

Post-Processing:

- Binder jetting typically requires post-processing steps to enhance the part's properties, such as curing, sintering, or infiltration.

Advantages of Binder Jetting:

Complex Geometries:

- Ability to create intricate and complex designs that may be difficult or impossible with traditional manufacturing methods.

Wide Material Range:

- Suitable for a variety of materials, including metals, ceramics, and composites.

Large Build Volumes:

- Can produce relatively large parts compared to some other additive manufacturing techniques.

Cost-Effective:

- Can be a cost-effective solution for producing low-volume or customized parts.

Sand Casting Molds:

- Excellent for creating sand casting molds and cores for metal casting.

Disadvantages:

Lower Strength (Initially):

- The green parts produced by binder jetting have relatively low strength and density.

Post-Processing is Necessary:

- Significant post-processing is often required to achieve desired mechanical properties.

Dimensional Accuracy:

- Dimensional accuracy can be affected by powder characteristics and post-processing.

Applications:

- **Sand Casting:** Creating sand molds and cores for metal casting.
- **Full-Color Prototypes:** Producing multi-color prototypes for design and aesthetic evaluation.
- **Metal Parts:** Fabricating metal parts for various applications, often requiring further processing.
- **Ceramic Components:** Creating complex ceramic parts for aerospace, biomedical, and industrial applications.
- **Functional Metal Prototypes:** Producing functional metal prototypes for testing and validation.

Binder Jetting Process-Types

1. Ballistic Particle Manufacturing(BPM)
2. Shape Deposition Manufacturing (SDM)

Ballistic Particle Manufacturing(BPM)

- ✓ Ballistic Particle Manufacturing (BPM) is an additive manufacturing technique, similar to 3D printing, that builds three-dimensional objects by depositing molten material layer by layer.
- ✓ It utilizes a process similar to inkjet printing, where tiny droplets of molten material are ejected from a nozzle onto a build platform. These droplets solidify, building up the desired part, layer by layer.
- ✓ https://www.youtube.com/watch?v=jbPlxWTLOCg

Ballistic particle manufacturing (BPM)

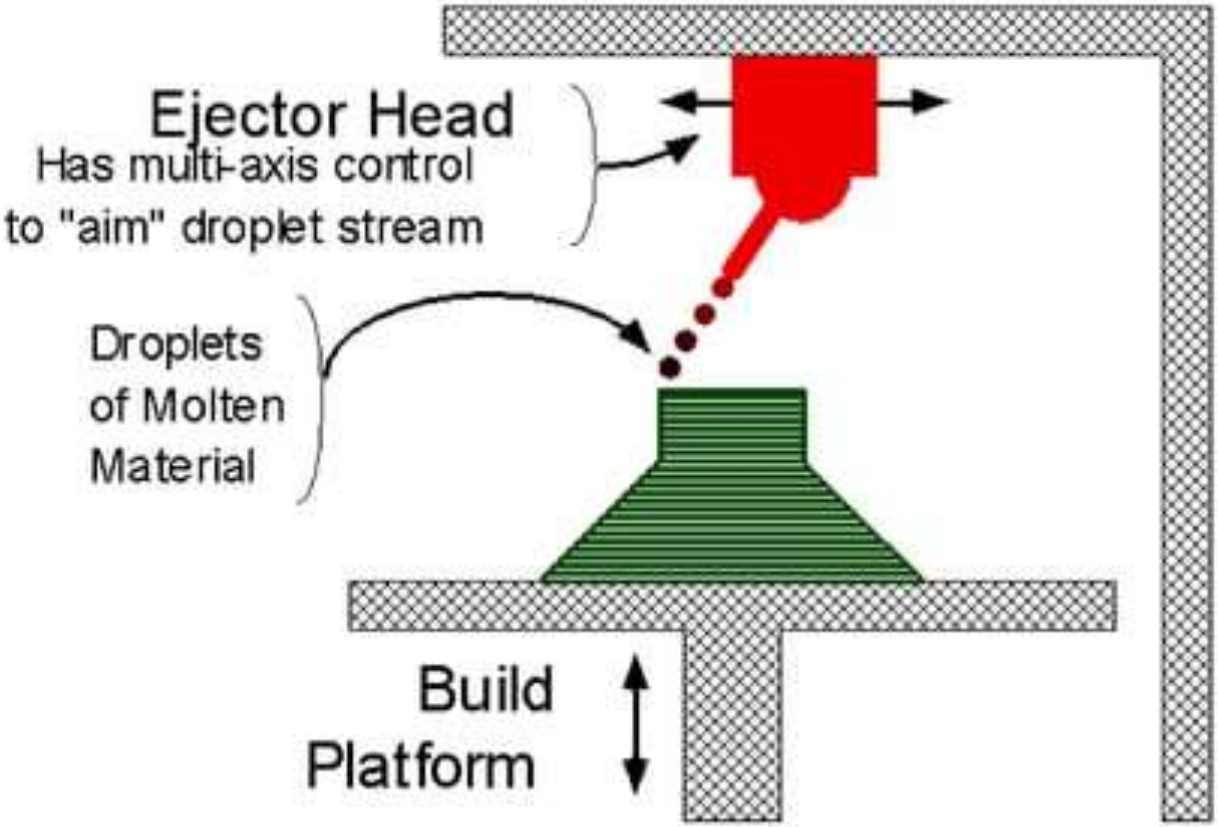

BPM process

- **CAD Model:** Begin with a 3D model of the object, typically created using CAD software.
- **Material Preparation:** Molten plastic or wax is fed into the piezoelectric jetting mechanism.
- **Droplet Deposition:** A multi-axis controlled NC system precisely directs the jetting mechanism to shoot tiny droplets of molten material onto a target surface.
- **Layer Formation:** The droplets freeze and solidify upon contact with the surface, creating a solid layer.
- **Layer Addition:** The platform holding the object is lowered, and the process is repeated to add subsequent layers, building up the part layer by layer.
- **Part Removal:** Once the part is complete, it is removed from the build platform.
- **Post-processing:** BPM parts may require minimal post-processing, such as cleaning or surface finishing.

Advantages of BPM

- ✓ **Minimal Post-Processing:** BPM parts require little to no additional processing after printing, reducing time and effort.
- ✓ **Low Toxicity:** The process generally involves low toxicity materials, making it safer for various applications.
- ✓ **Minimal Power Consumption:** BPM typically uses relatively low power compared to other manufacturing methods.
- ✓ **Low Cost and Materials:** The materials used and the overall process can be cost-effective.
- ✓ **Microgravity and Vacuum Compatibility:** BPM can be used in space or vacuum environments, expanding its potential applications.
- ✓ **No Size Constraints:** BPM can produce parts of various sizes, without inherent limitations on build volume.
- ✓ **Material Versatility:** It can work with virtually any thermoplastic material.

Disadvantages of BPM

✓ **Limited Strength and Durability:**

Parts produced via BPM often lack the strength and durability found in parts created by other additive manufacturing methods or traditional manufacturing.

✓ **Material Limitations:**

While versatile, certain materials might not be suitable for jetting or achieving desired properties.

✓ **Accuracy and Precision:**

Depending on the specific setup and material, accuracy and precision might be lower compared to other methods.

✓ **Surface Finish:**

The surface finish of BPM parts may not be as smooth or refined as desired for some applications.

Applications of BPM

- ✓ **Concept Visualization:**

BPM excels at creating physical models for design review and communication, allowing for quick iterations and adjustments during the design process.

- ✓ **Rapid Prototyping:**

The speed and ability to handle various materials make BPM a valuable tool for quickly creating prototypes of new designs.

- ✓ **Low-Cost Tooling:**

BPM can be used to create molds or tooling components for low-volume production, offering a cost-effective alternative to traditional methods.

- ✓ **Design Process Support:**

BPM parts, while not strong enough for functional use, are helpful for understanding form, fit, and aesthetics during the design phase.

Shape Deposition Manufacturing (SDM)-Introduction

- ✓ Shape Deposition Manufacturing (SDM) is a rapid prototyping process in which mechanisms are simultaneously fabricated and assembled through alternating steps of subtractive (milling) and additive (casting) manufacturing.
- ✓ SDM can be used with any castable material especially plastics, metals, resins, polymers and ceramics. When using ceramics, a mold is made of the support material and then the desired material is cast inside of it. Mold is made from mold material (wax) and support material.

SDM

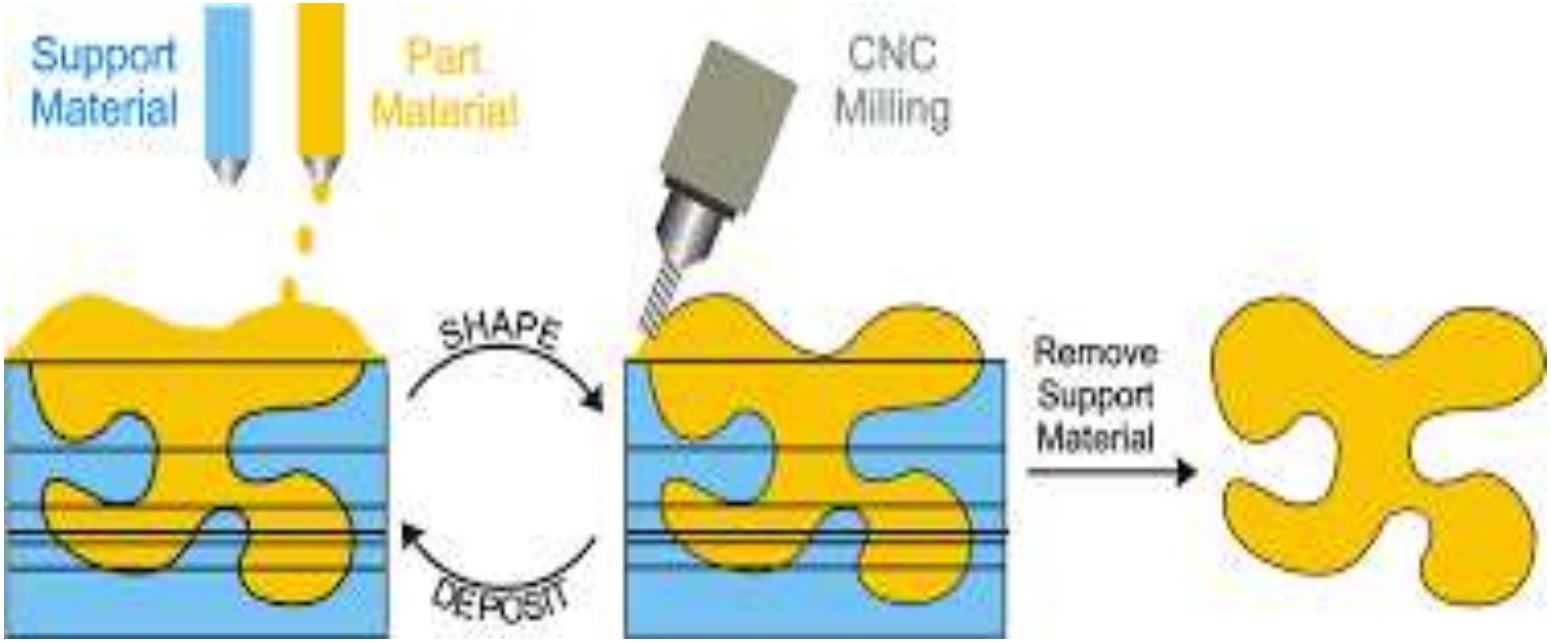
Support Material
Part Material
CNC Milling
SHAPE
DEPOSIT
Remove Support Material

SDM-Process

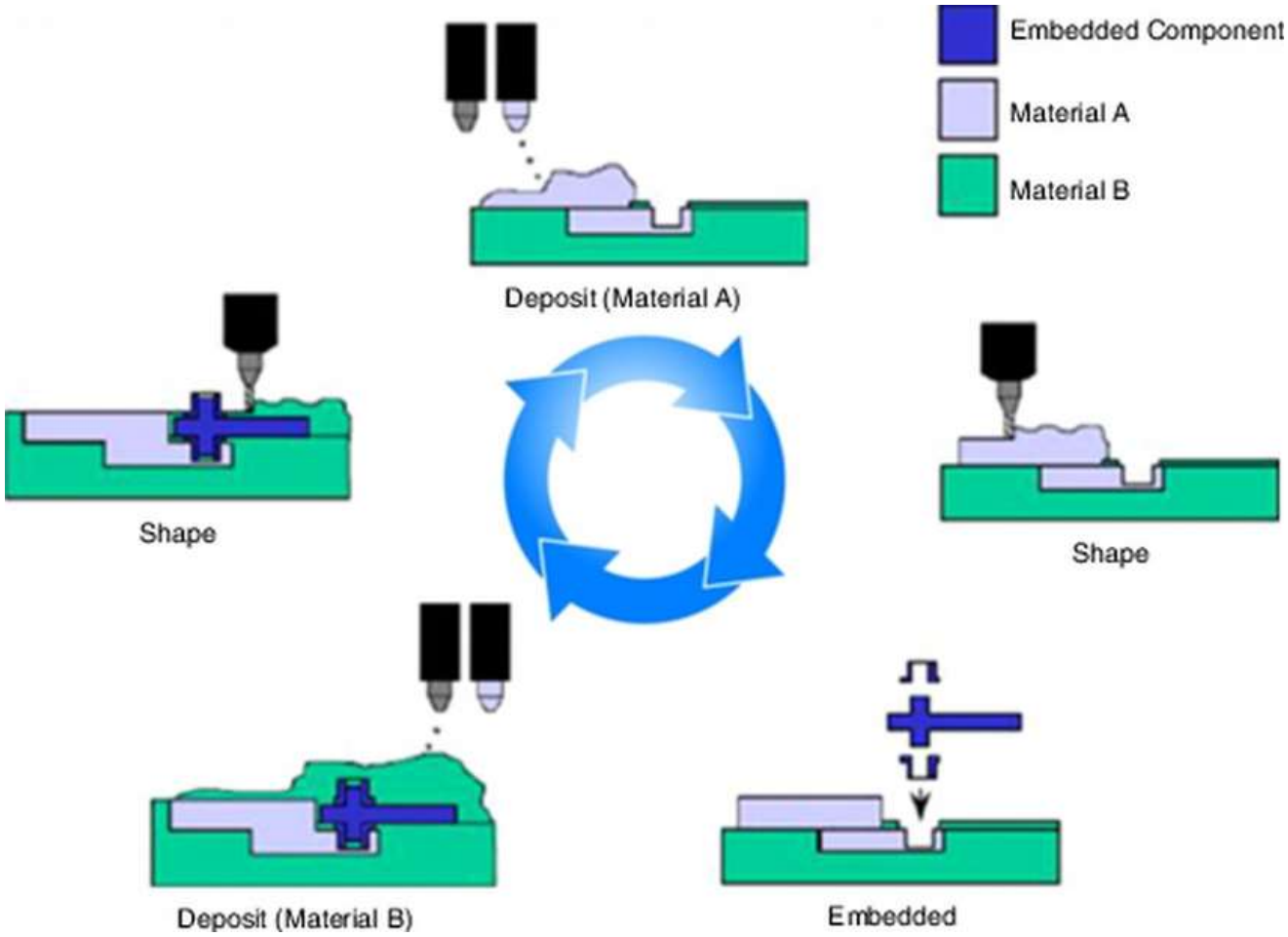
Embedded Component
Material A
Material B
Deposit (Material A)
Shape
Shape
Deposit (Material B)
Embedded

SDM-Process

- SDM is a solid freeform fabrication process which means it is built from start to finish rather than by removing excess materials from a given object. It does this by layering support material and the desired finished material.
- These graphics show the blue support material and the yellow final products.
- Support material is laid down as a base for the final material.
- Final material is laid on top of the support material.
- CNC mills the part to the desired shape.
- Surface is washed clean and prepared for the next layer of support and final material.
- This process is repeated until the final layer is reached.
- Support material is removed.

Advantages-SDM

- ✓ An advantage of SDM is the ability to embed objects into the part as it is being manufactured.
- ✓ This could include electronic equipment that needs precise placement in the object.
- ✓ It is also possible to use different materials within the same part. This process is illustrated in the figure to the right.
- ✓ SDM is also extremely precise; accurate within 5 microns. There is a lot of flexibility with the shape being made and the materials being used.

Disadvantages-SDM

- ✓ Relatively expensive compared to other rapid prototyping processes.
- ✓ Also, the process is relatively time consuming.
- ✓ The machine is not widely available.

Applications-SDM

- ✓ Software-Defined Wide Area Networks (SD-WANs) offer better control at lower cost and ultimately give network managers the ability to configure and deploy branch offices quickly and easily.
- ✓ SD-WANs allow you to manage your entire WAN centrally in the cloud even if your enterprise is spread across many different locations around the world.

Material Extrusion Process

1. Fused Deposition Modeling (FDM)

Fused Deposition Modeling(FDM) process

- ✓ Fused deposition modeling (FDM) is an extrusion-based 3D printing technology. The build materials used in FDM are thermoplastic polymers and come in a filament form. In FDM, a part is manufactured by selectively depositing melted material layer by layer in a path defined by the CAD model.

Construction of FDM

- ✓ The 3D printers that work on FDM technology consist of the printer platform, a nozzle (also called as printer head) and the raw material in the form of a filament.
- ✓ **The Printer Platform**
  The printer platform or the bed is typically made of some metal, ceramic or hard plastic, and each successive layer is deposited on this platform.
- ✓ **The Nozzle / Printer Head**
  The nozzle of FDM printers is attached to a mechanical chassis which uses belt and / or lead screw systems to move it. The entire extrusion assembly is allowed to move in X, Y and Z dimensions by a motorized system. A fourth motor called as the stepper motor is used to advance the thermoplastic material into the nozzle. All the movements of the head and the raw material are controlled by a computer.

FDM Apparatus

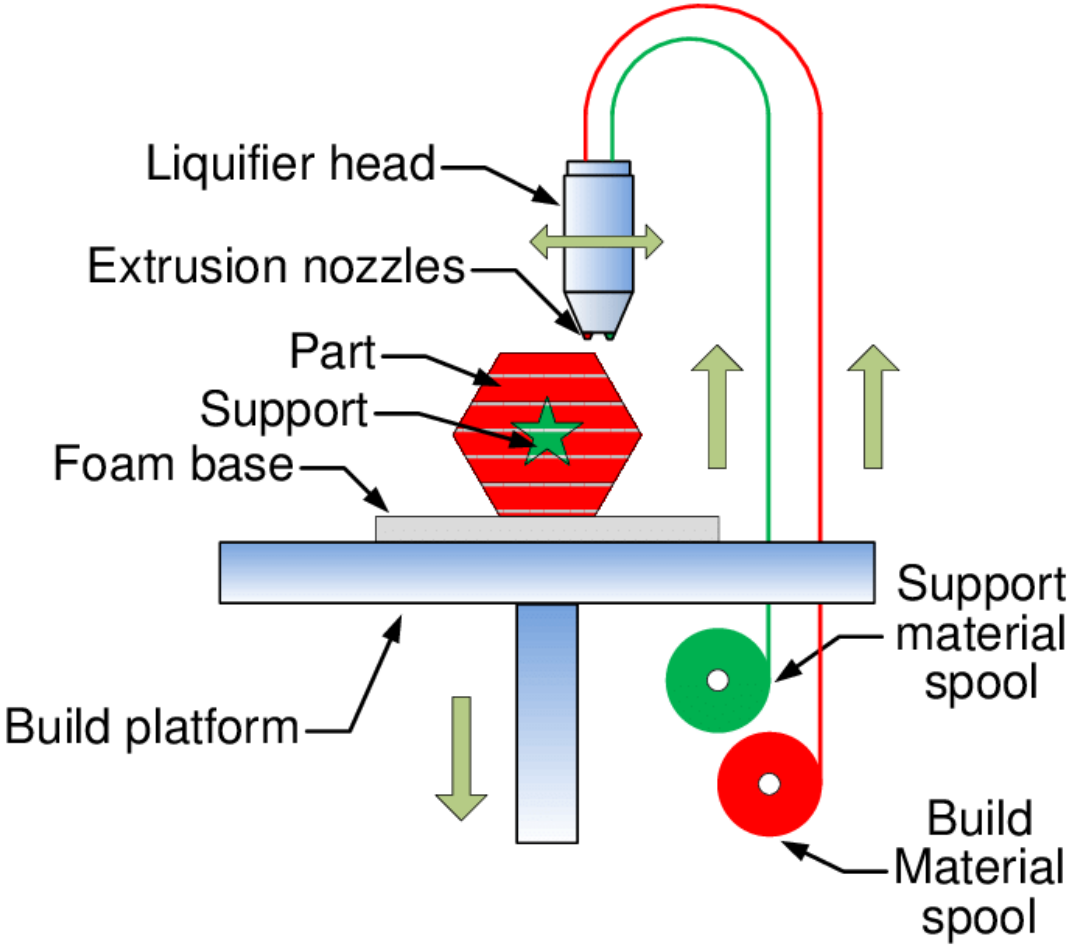

Steps in the FDM process

The product is formed on a mobile building platform

[1]. A plastic wire

[2] Plastic wire is fed through rollers

[3] pushing the thread through a heated nozzle

[4] where the wire is heated and then ejected from the nozzle at constant speed to build a cross section of the CAD model.

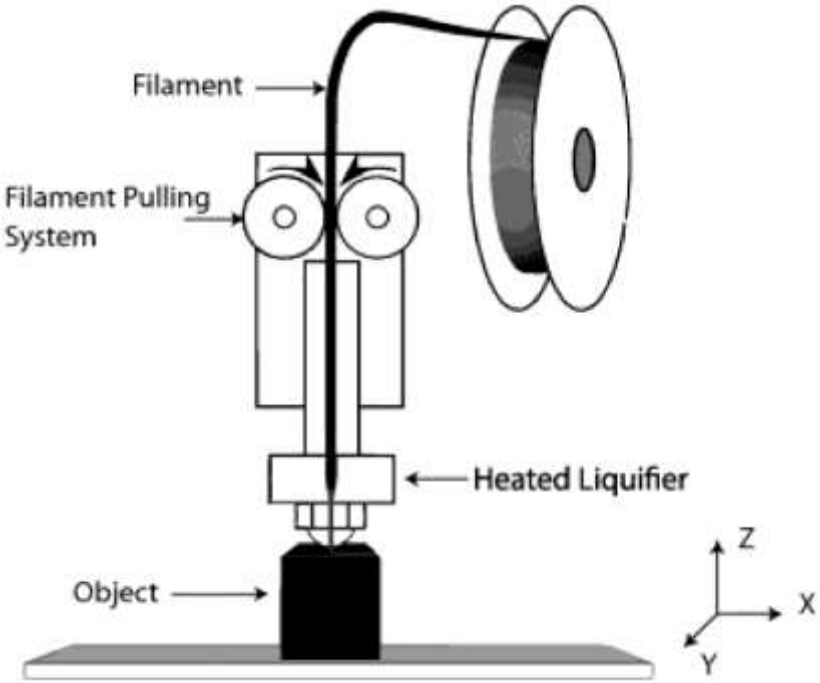

Working of FDM Process

- ✓ When the FDM printer begins printing, the raw material is extruded as a thin filament through the heated nozzle.
- ✓ It is deposited at the bottom of the printer platform, where it solidifies.
- ✓ The next layer that is extruded fuses with the layer below, building the object from the bottom up layer by layer. Most FDM printers first print the outer edges, the interior edges next and lastly the interior of the layer as either a solid layer or as a fill in matrix.
- ✓ In some objects / models, there are fragile ‘overhangs’ that will droop unless they are given some support.
- ✓ FDM printers incorporate a mechanism whereby these support structures (called struts) are printed along with the object.
- ✓ They are later removed once the build is complete. These struts are usually of the same material as the object.
- ✓ Some printers have a second extruder to specifically deposit soluble thermoplastic struts when there is a need to prevent the overhangs from drooping. These struts may be of a different composition than the thermoplastic used for the 3D model. They are later dissolved by an appropriate solvent.

Raw Material-FDM

- ✓ The raw material is typically production grade thermoplastics, though sometimes metal is used as well. The thermoplastic material is capable of being repeatedly melted when exposed to heat and re-solidified when the heat is withdrawn.
- ✓ The thermoplastic filament or metal wire is wound as a coil on a mounted spool. It is then fed through the printer nozzle.
- ✓ The better class of 3D FDM printers allows the temperature of the nozzle to be maintained just close to the glass transition temperature of the material being extruded. This allows the material to be extruded in a semi-liquid state, but return to solid state immediately. This results in a better dimensional accuracy.

Advantages of FDM

- ✓ A wide range of FDM printers are available in the market today
- ✓ The raw material is inexpensive, durable and maintains dimensional integrity
- ✓ There is a wide choice of raw material
- ✓ They are affordable
- ✓ Low turnaround time

Disadvantages of FDM

- ✓ **1. Only suitable for simple and small-sized parts production.** Because the capabilities of FDM 3D Printing is limited, and the part's size produced by FDM is small. If you want to print something large, you wouldn't consider FDM.

- ✓ **2. Rough surfaces details.** By melting thermoplastic filament and put it layer by layer, it will make the layer texture very obvious.

- ✓ **3. Unstable quality.** The layer thickness is not strong, which means the mechanical properties of FDM printed parts are unstable and durability cannot be guaranteed. Therefore, the applications of FDM parts are limited.

Applications of FDM

- ✓ creating prototypes for Fit, Form and Function testing
- ✓ rapid tooling patterns and mould inserts
- ✓ creating and testing any parts that work under thermal loads
- ✓ production of precise and complex end-use parts e.g. jigs & fixtures
- ✓ Sectors that use FDM 3D Printers include:
- ✓ Automotive
- ✓ Aerospace
- ✓ Manufacturing
- ✓ Industrial
- ✓ Medical
- ✓ Architecture
- ✓ Consumer Goods
- ✓ Fashion
- ✓ Education & Research

Sheet Lamination Process

1. Laminated Object Manufacturing (LOM)
2. Solid foil polymerization (SFP)
3. Ultrasonic consolidation (UC)

Laminated Object Manufacturing (LOM)

- ✓ Laminating (LOM) is one of the first additive manufacturing techniques created and uses a variety of sheet material, namely paper. Benefits include the use of A4 paper, which is readily available and inexpensive, as well as a relatively simple and inexpensive setup, when compared to others.
- ✓ Laminated object manufacturing (LOM) uses a similar layer by layer approach but uses paper as material and adhesive instead of welding. The LOM process uses a cross hatching method during the printing process to allow for easy removal post build.

Laminated Object Manufacturing (LOM)

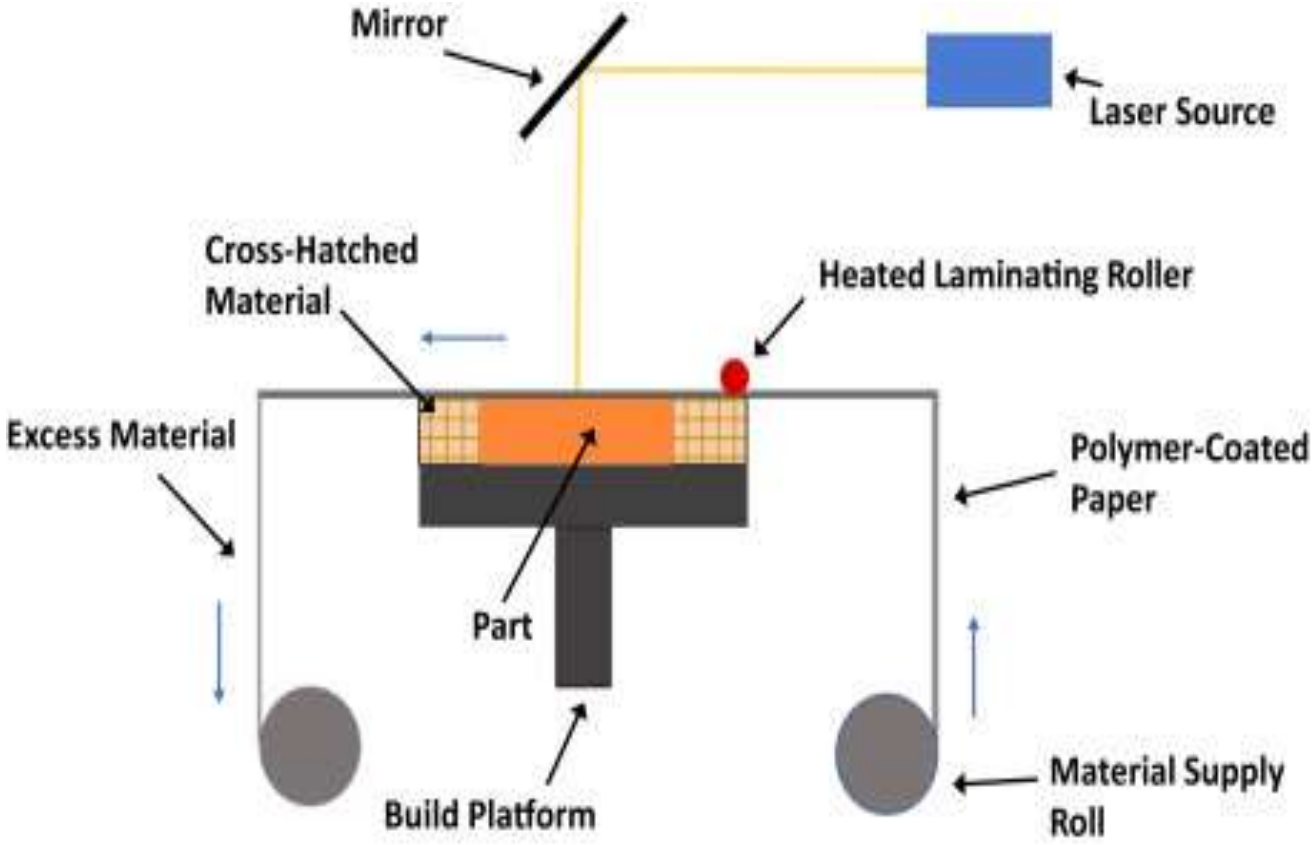

Laminated Object Manufacturing (LOM)

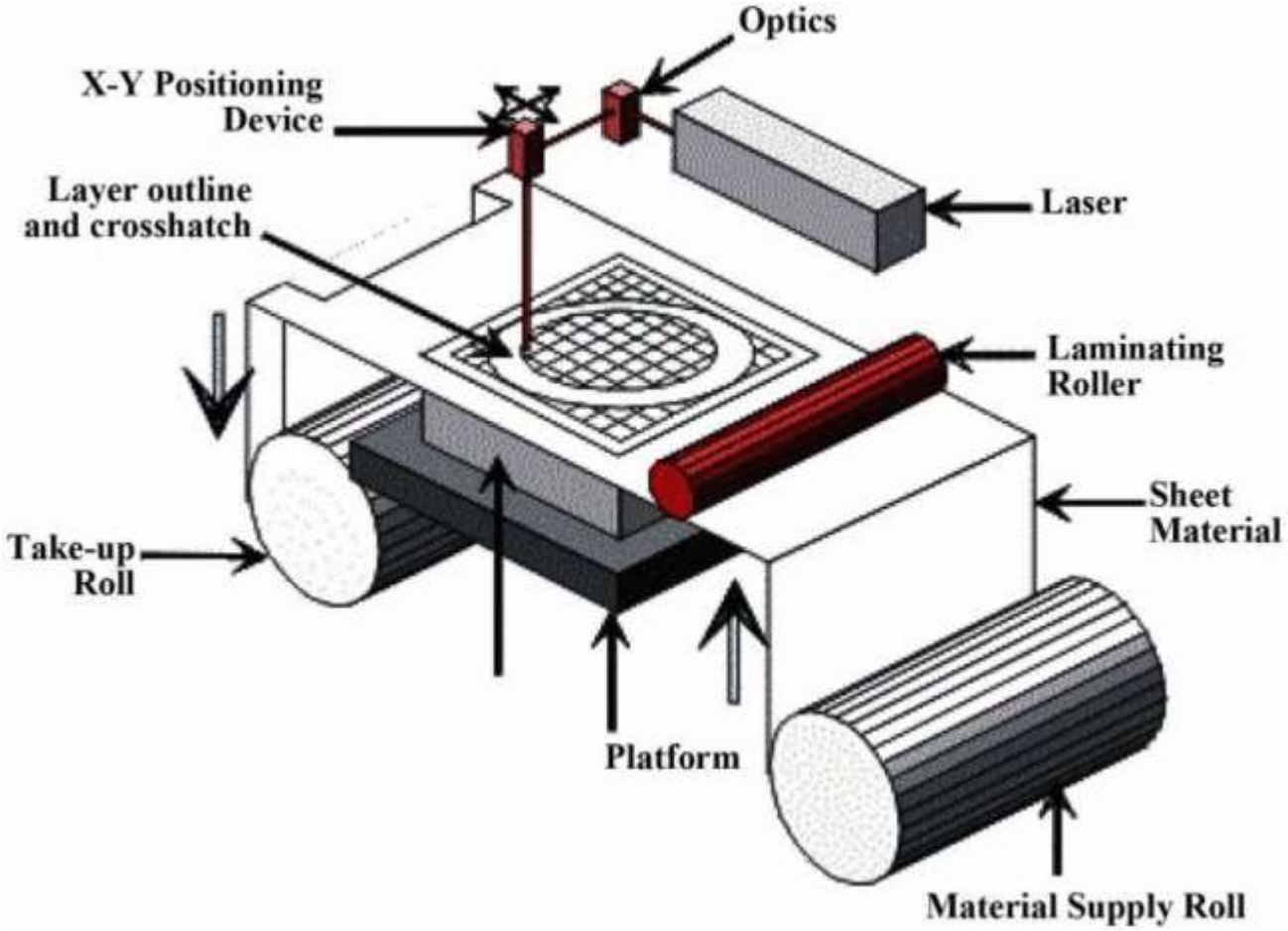

Laminated Object Manufacturing (LOM) Process

The process is performed as follows:

- ✓ Sheet is adhered to a substrate with a heated roller.
- ✓ Laser traces desired dimensions of prototype.
- ✓ Laser cross hatches non-part area to facilitate waste removal.
- ✓ Platform with completed layer moves down out of the way.
- ✓ Fresh sheet of material is rolled into position.
- ✓ Platform downs into new position to receive next layer.
- ✓ The process is repeated until full model or prototype prepared.

Advantages of LOM

- ✓ One of the main advantages of LOM is its low cost and high speed.
- ✓ LOM uses inexpensive and widely available materials, such as paper, that do not require special storage or handling.
- ✓ LOM also produces models with high accuracy and resolution, as the laser or the knife can cut fine details and complex shapes.
- ✓ LOM models are also strong and durable, as the layers are firmly bonded together.
- ✓ LOM can also create large models, as the size is limited only by the roll of material and the machine.

Disadvantages of LOM

- ✓ One of the main disadvantages of LOM is its limited material choice and quality.
- ✓ LOM can only use materials that can be cut and bonded by heat or glue, which limits the range of colors, textures, and properties of the models.
- ✓ LOM models also tend to have rough edges and surfaces, as the material is cut by the laser or the knife.
- ✓ LOM models also have a high risk of warping, curling, or delaminating, as the material can shrink or expand due to temperature or humidity changes.
- ✓ LOM models also have a low environmental impact, as the material is not recyclable or biodegradable.

Applications of LOM

- ✓ LOM can be used for various applications that require fast and cheap prototyping, such as product design, architecture, engineering, education, art, and entertainment.
- ✓ LOM can create models that resemble the final product in shape and size, but not in appearance or functionality.
- ✓ LOM can also create models that can be tested for fit, form, and function, but not for strength, durability, or performance.
- ✓ LOM can also create models that can be used for visual communication, presentation, or demonstration, but not for sale, distribution, or use.

Solid foil polymerization (SFP)

- ✓ Solid foil polymerization (SFP) is an additive manufacturing (AM) technique that uses semi-polymerized foils that are soluble in monomer resin to build parts. The foils solidify and bond to the previous layer when exposed to UV light, and they also become insoluble. Once the cross-section has been illuminated, a new foil can be applied.
- ✓ Solid foil polymerization (SFP) . The part is built up using semi-polymerized foils which are soluble in monomer resin. On exposure to UV light, the foil solidifies and bonds to the previous layer. It also becomes insoluble.

Solid Foil Polymerization-Process

1. **Design Creation**:

- ✓ **Conceptualization**: Develop the concept for the prototype and finalize the design specifications.
- ✓ **CAD Modeling**: Use Computer-Aided Design (CAD) software to create a detailed 3D model of the prototype.

1. **Preparation of Materials**:

- ✓ **Solid Foil Selection**: Choose the appropriate polymer foil material for the process. This material is usually a thin, flexible sheet that can be layered and polymerized.

3.Printing or Cutting:

- ✓ **Layering**: Stack and align the solid foil sheets according to the design requirements. This may involve cutting the foil into specific shapes or patterns.
- ✓ **Adhesion**: Use an adhesive or bonding process to secure the layers together in preparation for polymerization.

SFP-Process

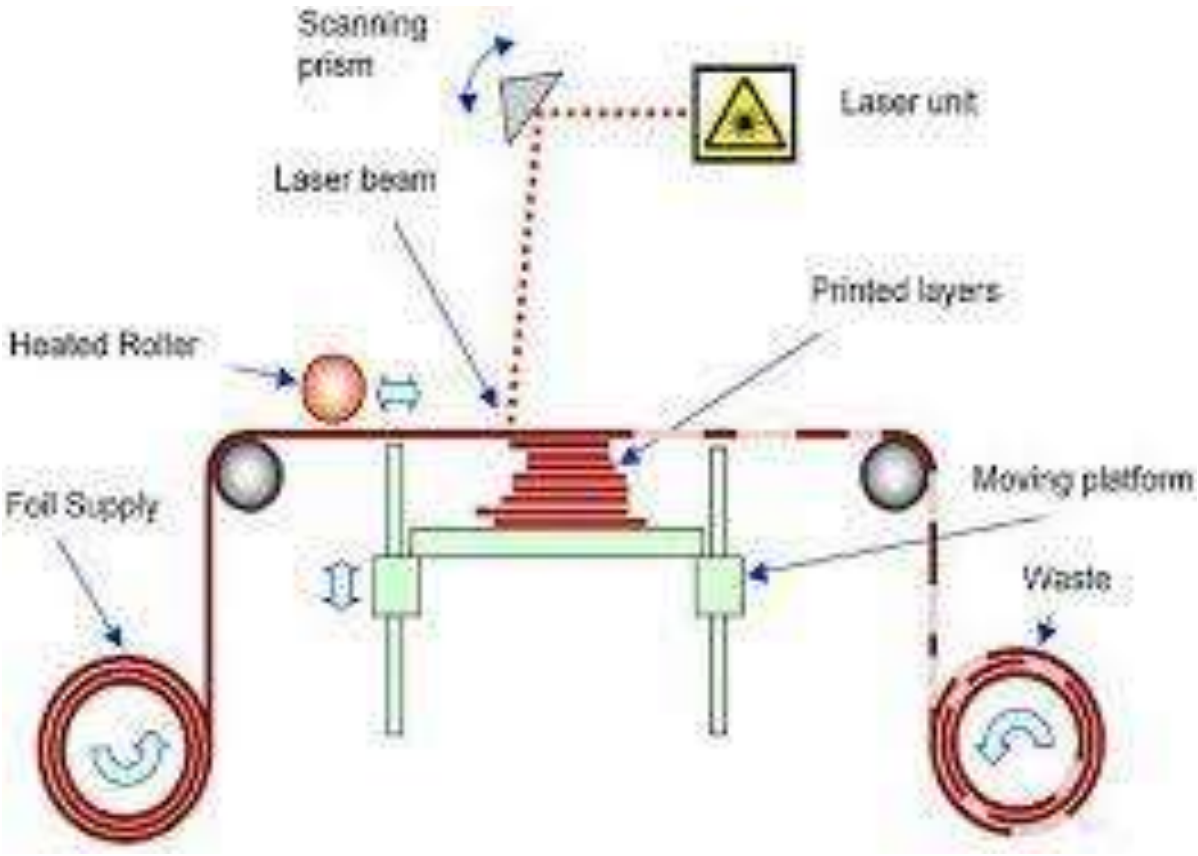
Scanning prism
Laser unit
Laser beam
Printed layers
Heated Roller
Moving platform
Foil Supply
Waste

Solid Foil Polymerization-Process

4.Polymerization:

- ✓ **Exposure**: Subject the layered foils to a polymerization process. This typically involves exposure to a light source, heat, or chemical agents that trigger the polymerization reaction.
- ✓ **Curing**: Ensure the polymerization process is completed properly, resulting in a solid, hardened prototype.

5.Post-Processing:

- ✓ **Cleaning**: Remove any residual adhesive or unpolymerized material from the prototype.
- ✓ **Finishing**: Perform any additional finishing steps such as sanding, painting, or assembling parts if needed.

Solid Foil Polymerization-Process

7.Inspection and Testing:

- ✓ **Quality Check**: Inspect the prototype for accuracy, structural integrity, and adherence to design specifications.
- ✓ **Testing**: Conduct any necessary functional tests to ensure the prototype performs as intended.

Advantages -SFP

- ✓ **Speed**: It allows for quick production of prototypes, accelerating the development cycle.
- ✓ **Precision**: High accuracy in creating complex geometries and detailed features.
- ✓ **Cost-Effectiveness**: Generally lower material and operational costs compared to some traditional methods.
- ✓ **Flexibility**: Easily adjustable designs and quick iterations to refine prototypes.
- ✓ **Minimal Waste**: Efficient use of materials with less waste compared to subtractive manufacturing techniques.

Disadvantages -SFP

- ✓ **Material Limitations**: Restricted to specific types of polymers and foils, which may not suit all applications.
- ✓ **Surface Finish**: Potentially rough or less detailed surface finishes compared to other methods.
- ✓ **Complexity**: Can be complex to set up and require precise control over polymerization conditions.
- ✓ **Post-Processing**: May need extensive finishing and cleaning, adding to the overall time and effort.
- ✓ **Strength**: Prototypes may lack the strength or durability of parts made by other manufacturing processes.

Applications -SFP

- ✓ **Functional Testing**: Producing prototypes to test form, fit, and function early in the design phase.
- ✓ **Concept Validation**: Quickly turning design concepts into physical models for evaluation and feedback.
- ✓ **Custom Parts**: Creating custom components or small batches of parts for specialized applications.
- ✓ **Design Iteration**: Allowing for rapid changes and adjustments based on testing and feedback.

Ultrasonic consolidation (UC)

- ✓ Ultrasonic additive manufacturing (UAM) is a solid freeform fabrication process also known as Ultrasonic Consolidation (UC). It is a hybrid sheet lamination process that utilizes ultrasonic seam welding to merge metallic tapes combined with computer numerically controlled (CNC) milling for dimension accuracy.
- ✓ Ultrasonic consolidation (UC) is a 3D metal printing technology that uses ultrasonic welding and layered manufacturing to create solid objects.
- ✓ It's a type of additive manufacturing (AM) that uses sheet lamination, similar to laminated object manufacturing (LOM).
- ✓ UC is different from other AM techniques because it uses relatively low temperatures, well below the melting points of the materials used.

Ultrasonic consolidation (UC)-Process

- ✓ A base plate is placed onto the machine anvil and fixed into place.
- ✓ Metal foil is then drawn under the sonotrode, which applies pressure through a normal force and the ultrasonic oscillations, and bonded to the plate.
- ✓ This process is then repeated until the required area has been covered in ultrasonically consolidated material.
- ✓ A CNC mill is then used to trim the excess foil from the component and achieve the required geometry.
- ✓ The deposit and trim cycle is repeated until a specified height is reached, (typically 3–6 mm).
- ✓ At this height a smaller finishing mill is used to create the required tolerance and surface finish of the part.
- ✓ The deposit, trim and finish cycle continues until the finished object has been manufactured; at which point it is taken off the anvil and the finished article is removed from the base plate.

Ultrasonic consolidation (UC)-Process

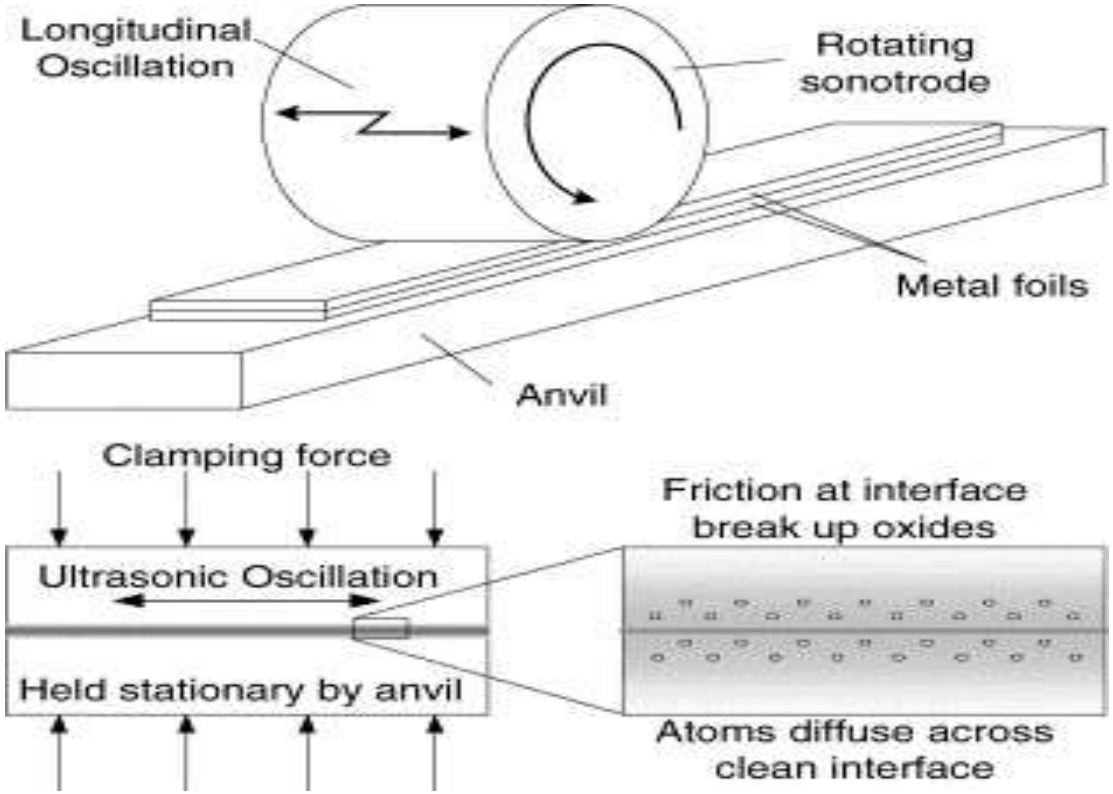

Advantages-UC Process

1.Speed

- ✓ Ultrasonic welding uses high-frequency vibrations to heat, weld, and cool materials in seconds, sometimes as little as 200–300 milliseconds.

2.Accuracy

- ✓ Ultrasonic testing can determine the size, shape, and position of flaws in materials with greater accuracy than other methods. It's also sensitive to surface flaws.

3.Safety

- ✓ Ultrasonic welding is precise and doesn't use excess energy, which can reduce errors and damage to nearby areas. It can also be used to bond dissimilar materials, such as metals to plastics.

4.High quality

- ✓ UAM produces a clean, tight seal without filler materials.

5.Efficiency

- ✓ UAM is efficient and can save on costs compared to other manufacturing techniques.

Disadvantages-UC Process

1.Material constraints

- ✓ The process may not work with all materials, and bonding challenges may arise with certain materials. For example, too high pressure can cause excessive stresses and deformation in some materials.

2.Equipment costs

- ✓ The specialized equipment required for UC can be expensive, which may be a barrier for smaller manufacturers.

3.Process speed

- ✓ UC is generally slower than other additive manufacturing techniques, which can be a drawback for large-scale production.

4.Overlap distance

- ✓ If the edge-to-edge overlap distance is too large, it can create gap defects that reduce the bonding area and strength. If the overlap is too much, the foil may pop up or bonding may be poor.

5.Pressure

- ✓ Too low pressure can lead to insufficient deformation and contact between the build materials, which can result in a weak bond. However, too high pressure can cause larger levels of deformation and excessive stresses

Applications-UC Process

- ✓ UAM part examples: Micro heat exchanger and dissimilar metal part with aluminum and copper.
- ✓ Joining of multi-metals into a single part. Metals are copper, brass, and aluminum.
- ✓ Embedding a temperature sensitive fiber optic cable.

Materials Used in Additive manufacturing Process

- ✓ Rapid prototyping (RP) uses a variety of materials, including plastics, metals, resins, composites, and ceramics. The material used depends on the rapid prototyping technique being used and the desired properties of the final product.

Prototyping Materials List: Selecting the correct material is pivotal in rapid prototyping. Common options include:

1. Plastics: ABS, PLA, Polyethylene.
2. Metals: Aluminum, Stainless Steel, Titanium.
3. Resins
4. Rubber/Elastomers: Silicone, TPU.
5. Composites: Carbon Fiber, Glass Fiber Reinforced Polymers.

Materials Used in Additive manufacturing Process

- ✓ Rapid prototyping (RP) involves quickly fabricating a scale model of a physical part or assembly using three-dimensional computer-aided design (CAD) data.
- ✓ The materials used in this process depend on the specific technology or method employed. Here are some common materials for various rapid prototyping techniques:

1.Selective Laser Sintering (SLS)

- ✓ **Powder Materials**: Nylon (Polyamide) is the most commonly used powder, but other materials include glass-filled Nylon, polystyrene, and metals (e.g., aluminum, stainless steel). SLS can also use composite powders and other specialized materials.

2.Digital Light Processing (DLP)

- ✓ **Resins**: Similar to SLA, DLP uses photopolymer resins that cure with UV light. Resins are available in various formulations, including standard, castable, and high-resolution types.

3.Multi Jet Fusion (MJF)

- ✓ **Powder Materials**: Predominantly uses Nylon (PA12) powder, but also available in other materials such as TPU (Thermoplastic Polyurethane) for flexible parts and certain other polymers.

4.Electron Beam Melting (EBM)

- ✓ **Metal Powders**: Commonly uses titanium alloys, cobalt-chrome alloys, and stainless steel. EBM is used for high-strength, high-performance metal parts.

5.Direct Metal Laser Sintering (DMLS)

- ✓ **Metal Powders**: Includes materials like stainless steel, titanium, aluminum, and cobalt-chrome alloys. DMLS is used for producing functional metal parts with complex geometries.

6.Inkjet Printing (3D Inkjet)

- ✓ **Materials**: Can use a variety of materials, including photopolymer resins, ceramics, and metals. Inkjet printers deposit binding agents onto powder layers or liquid resins.

7.Laminated Object Manufacturing (LOM)

- ✓ **Sheets**: Uses layers of paper, plastic, or metal sheets. Each layer is bonded together, cut to shape, and then laminated.

8.Stereolithography (SLA)

- **Resins**: Photopolymer resins are used in SLA printers. They come in various types, including standard, tough, flexible, and high-temperature resins, each offering different properties suited to specific applications.

9.Fused Deposition Modeling (FDM)

- **Thermoplastics**: Common materials include PLA (Polylactic Acid), ABS (Acrylonitrile Butadiene Styrene), PETG (Polyethylene Terephthalate Glycol), and Nylon. These materials are chosen for their ease of use and versatility.