ITEM	PART NUMBER	QTY	DESCRIPTION
1	127-00007	4	Terminal Block 4C 5mm 12-24AWG Plug
2	127-00021	1	Terminal Block 8C 3.5mm 14-30Awg Plug
3	127-00026	1	Terminal Block 7C 3.5mm 14-30Awg Plug
4	161-00002	1	Fan 24VDC Square 40mm x 15mm 6.0CFM
5	161-00004	1	Fan Finger Guard, 40mm
6	185-00006	1	E-Stop Switch Assembly
7	478-00002	4	Threaded Standoff 6mm Hex 10mm Lg M3 Nylon
8	840-00001	1	USB B Female Bulkhead to USB B Mini Male 30cm
9	14064	1	Chassis End Plate, Front
10	14065	1	Chassis End Plate, Back
11	14066	1	Chassis Cover
12	16039	1	Controller
13	16045	1	Power Supply Interface
14	16048	1	PCBA, Control Button
15	28077	4	Rubber Foot 1/8 Wall
16	28089	1	Power Supply 24V 320W
17	80034-001	1	Chassis
18	BHCSM306BS	10	Button Head Cap Screw M3 x 6
19	BHCSM408S	6	Button Head Screw M5 x 8 Steel/Black
20	HNM3SS	4	Hex Nut M3
21	SHMSM320S	4	Socket Head Screw M3 x 20
22	SHMSM406SB	8	Socket Head Screw M4 x 6

REVISIONS			
SYM	DESCRIPTION	BY	APPR
G	ORIGINAL	BJD 1/14/16	---
H	Revised per ECO-000198	BJD 2/23/16	---
K	Revised per ECO-000213	BJD 4/6/16	---
K1	Added reference views	BJD 4/27/16	---
L	Changed power supply	BJD 6/6/17	

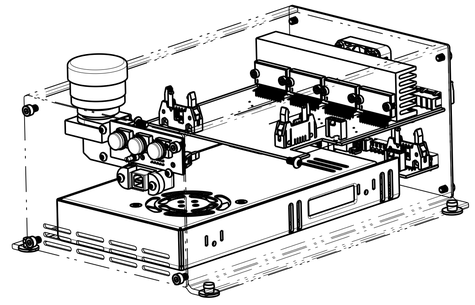

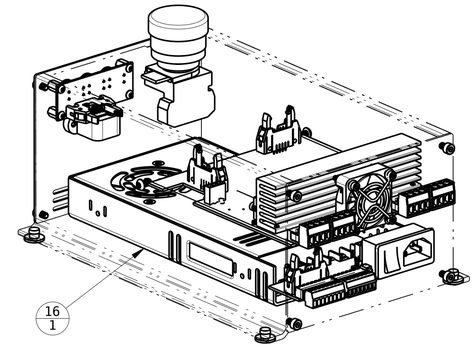

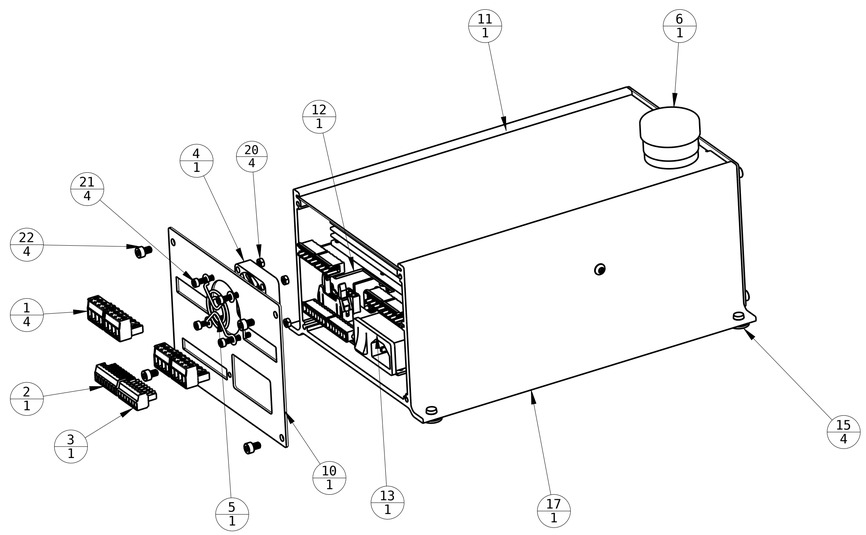

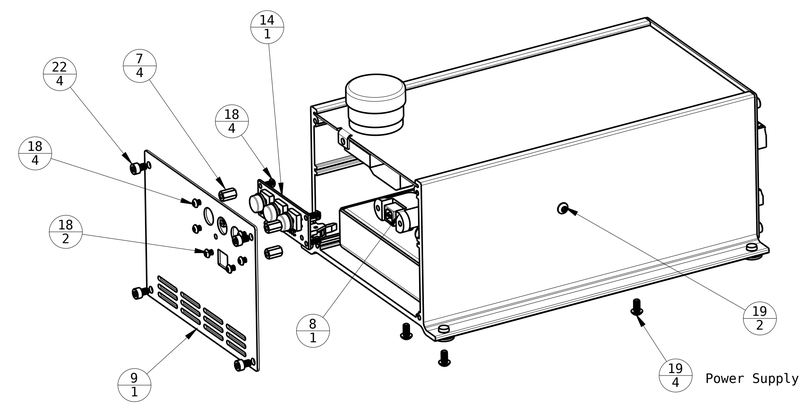

Notes.
1. Cables are not shown on this drawing

The work is licensed under a Creative Commons Attribute-Share Alike 3.0 License

DRAWN	BJD	1/14/16
CHECKER		

X-Controller Assembly

INVENTABLES
www.inventables.com

30136

SCALE

SHEET 1 OF 1