ASTRELIGHTS INC

Product Datasheet

BQ-FPL-F2X4-75KK-N	F2X4-20/30/40/50/75W-3000/3500/4000/5000/5700/6500K
BQ-FPL-F2X2-40KK-N	F2X2-15/20/30/40/50W-3000/3500/4000/5000/5700/6500K
BQ-FPL-F1X4-40KK-N	F1X4-40W-3500/4000/5000/5700/6500K

6CCT | 5 Power | External isolated driver | 130Lm/W | ETL | FCC | DLC5.1

Features

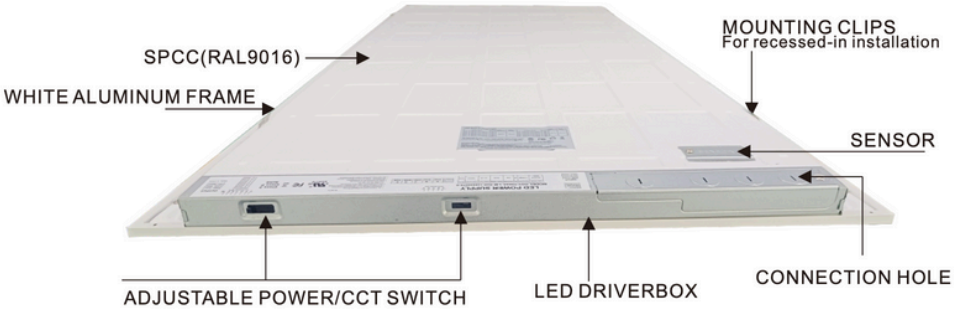

Areas of Application

Public areas
Meeting room
Corridors
Home lighting
Shops

Restaurant
Hotel
Workshop
Office
Supermarket
Classroom

Product Features

- Conform to the market standards of the United States, through ETL, CETL, FCC, DLC certification
- Adjustable power 20-30-40-50-75W
- Adjustable 6CCT 3000K/3500K/4000K/5000K/5700K/6500K
- Optional input voltage100-277V and 100-347V
- UGR<22 and The light efficiency>125lm/w
- It can be equipped with emergency power supply
- High quality led LM80@L90>36000H, SDCM<5
- Flicker free, dimming depth < 10% (0-10V dimming)
- The shell thickness is 0.30mm, and the well type is designed
- Optional color temperature adjustment with wall switch

ASTRELIGHTS INC

DIP code to adjust 6CCT（**3000K-3500K-4000K-5000K-5700K-6500K**）

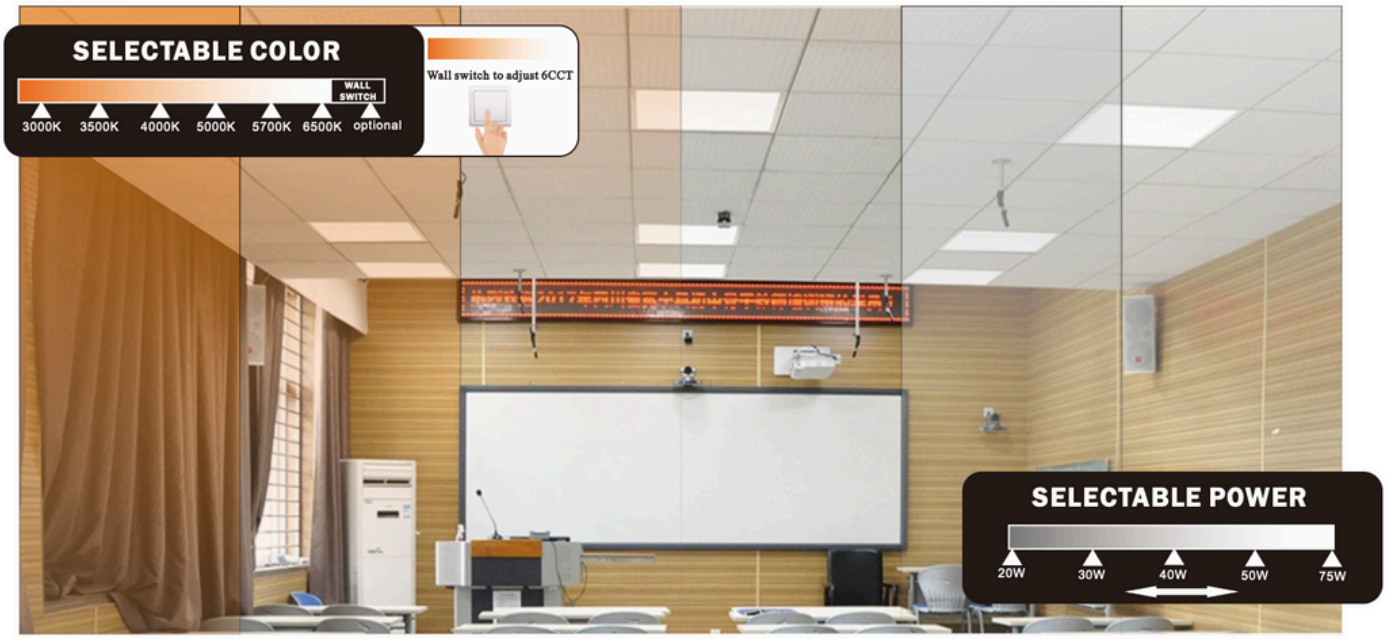

Double switch design can adjust power and CCT

0-10V Dimmable

0-100% dimmable
Please select a brand dimmer

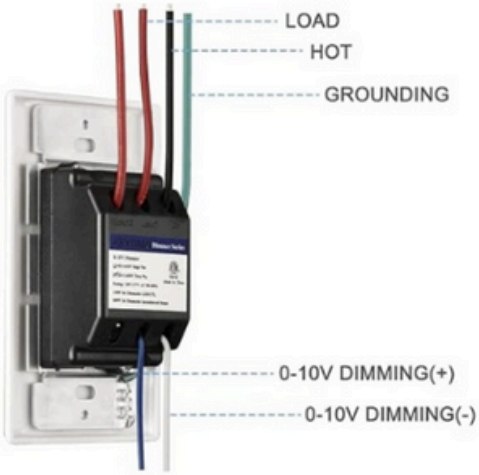

ASTRELIGHTS INC

Technical Data

Basic parameters

SIZE	2X2	1X4	2X4
Input Voltage(V) ✱	120-277V / 120-347V		
LED Model	SMD 2835/1W/140-150LM/W /Ra 80@R9>5		
LED Qty(PCS)	48*2	48*2	90*2
SDCM	<5	<5	<5
CRI	>80	>80	>80
Beam Angle	120°	120°	120°
LED Driver	30% flicker free		
Power Efficiency	>87%		
Output voltage	25-52VDC		
Output current(MAX)	1380mA		
Warrant	5 YEARS		
Operating Temp.(°C)	-20...+45 °C		
Storage Temp.(°C)	-20...+65 °C		
Material	SPCC+AL6063		
THD	<15%		
Power Factor	>0.95		
Withstanding	INPUT TO OUTPUT: 3000V@1.05mA@3S INPUT TO SHELL: 1000V@1.5mA@3S		
DIM	0-10V		
Installation	Surface mounted/Suspending		
Certificate	ETL FCC DLC ROHS		

✱ Optional input voltage

Optoelectronic parameters

Luminous efficacy	125Lm/w ±5%
Color temperature	3000 K~6500K
Power	20W~75W
Color rendering index Ra	⩾80 / ⩾90 (optional)
Standard deviation of color matching	⩽6
Flickering metric (Pst LM)	⩽ 1.0
Stroboscope effect metric (SVM)	⩽0.4
Beam angle	120°

Application

Type of protection	IP20
Protection class IK (shock resistance)	IK03
Dimmable	0-10V dimming
Application environment	Indoor
LED module replaceable	Not replaceable

Lifespan

Lifespan L70/B50 at 25 °C	50000 h
Lifespan L80/B10 at 25 °C	30000 h
Lifespan L90/B10 at 25 °C	20000 h
Number of switching cycles	50000

ASTRELIGHTS INC

Dimensions & Package

UNIT:mm

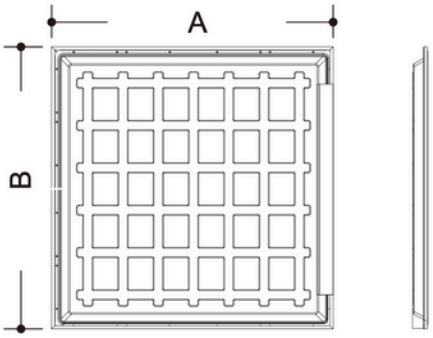

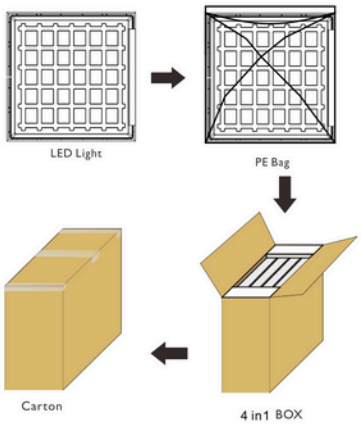

Dimensions & Weight

Dimension	2x2 (603*603 mm)	1*4in (303*1213mm)	2*4 (603*1213mm)
Carton box	26*7.3*25.6in	50*7.3*13.8in	50*7.3*26in
Gross weight	18LBs	21LBs	35LBs

Warning

1.Switch off before installation.
2.Switch on only after complete installation and examination of the circuit.
3.Professional electrician for installation and maintenance only.

Installation

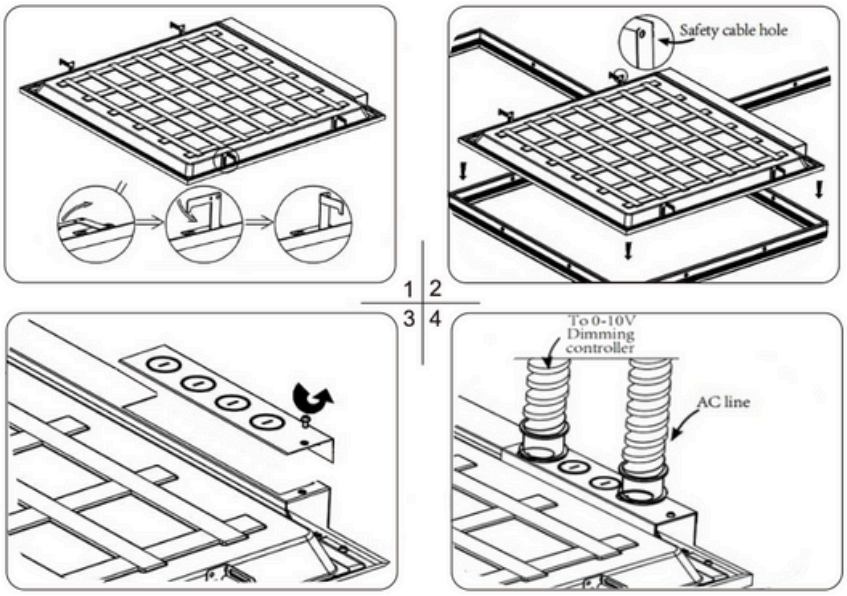

1. Lift up four mounting clips on the sides of the luminaire.You can do it by hand(Do wear work gloves)or use pliers.
2. Insert luminaire into T-bar ceiling grid.Secure safety cable to connectionhole as needed to meet local seismic requirements. Safety cable and method of attachment to the building provided by contractor according to local building codes.
3. Remove electrical enclosure cover.Carefully remove knockout for AC line input wires and 0-10V control line. Install listed electrical fittings in the knockout holes for wire protection if needed.
4. Plug in AC line to the LED Driver using 18-14AWG wire.When connecting 0-10V dimming controller, wire must run through a separate knockout hole equipped with an appropriate electrical fitting.