LED TROFFER

Ra>80

PF>0.9

5 Years warranty

C ETL LISTED US
Intertek
5000444

ASTRELIGHTS INC

Product Features

1.Smooth and comfortable light,low glare.

2.High lighting efficiency 125lm/W.

3.High quality isolated driver;High efficiency>87%,PF>0.9.

4.Mainly used in commercial lighting places,such as office,factory and supermarket.

5.Lifespan>50,000 hours & 5 years warranty.

6.Slim profile ensures much lower shipping and storage cost.

7.Very unique design for making it stand out easily, compared with regular troffers in the market.

Specification

Part No.	Power	Working Current	Input Voltage	Luminous Efficacy	CCT	Viewing Angle	Ra	PF	Dimmable	Warranty
ALI-TAA22-7G-40W-P5-TCP [Blank;(MS)]	20W/25W/30W /35W/40W	0.367A	120-277Vac	125lm/W	3500K/ 4000K/ 5000K/ 5700K/ 6500K	120°	≥80	≥0.9	0-10V	5 Years
ALI-TAA24-7G-50W-S5-TCP [Blank;(MS)]	20W/25W/30W/ 40W/50W	0.458A								

Remarks:
" (XX)" denotes sensor function; can be "MS"=motion sensor, "Blank"=without motion sensor.

ASTRELIGHTS INC

Product Dimmension

Part No.		TAA22	TAA24
Dimension (inch)	L	23. 74"	47. 75"
	W	23. 74"	23. 74"
	H	2.15"	2.15"

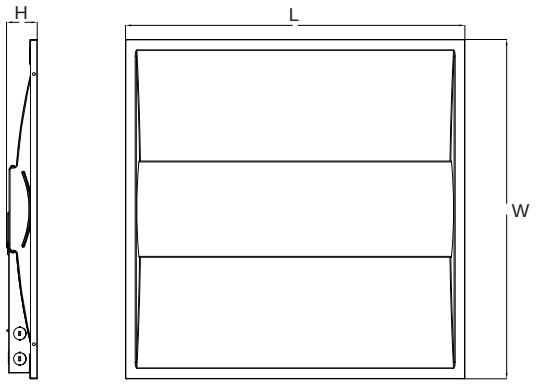

Installation Instruction

1.Unscrew the driver cover.

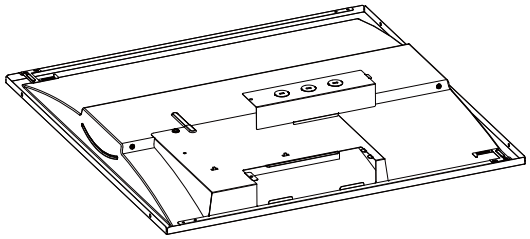

2.Connect the conduit to the driver box.

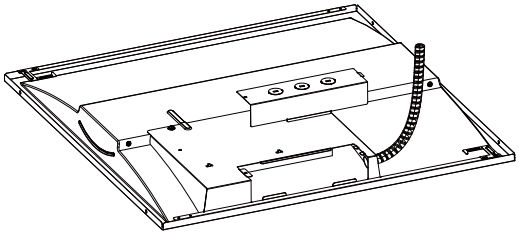

3.Connect other wires separately.

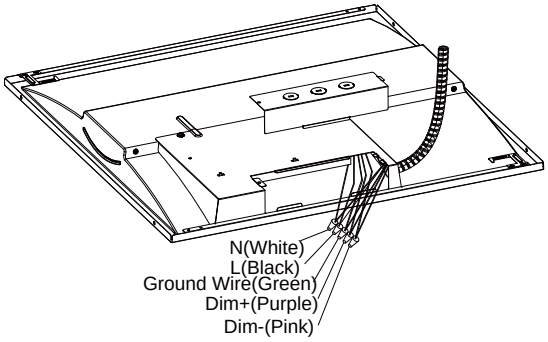

4.Put back the driver cover and fix it by screw.

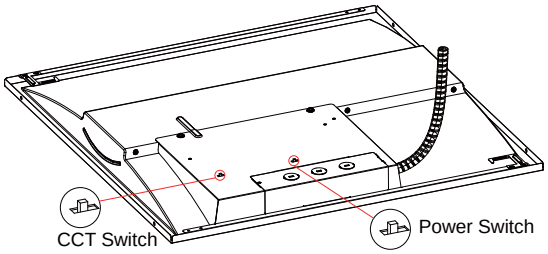

Recessed Installation

1.Replace existing lighting fixture from ceiling with LED Troffer.

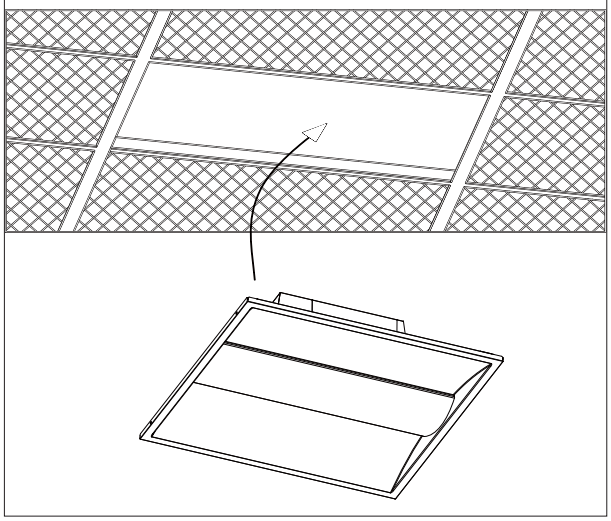

2.Replace existing lighting fixture from ceiling with LED Troffer.

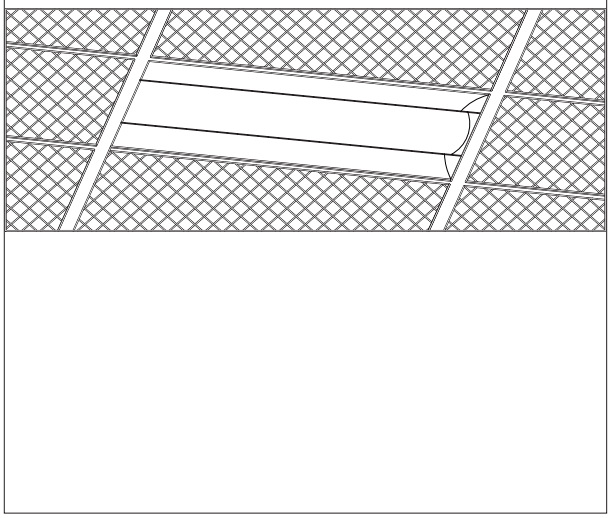

3. Use the protective brackets for the sake of safety.

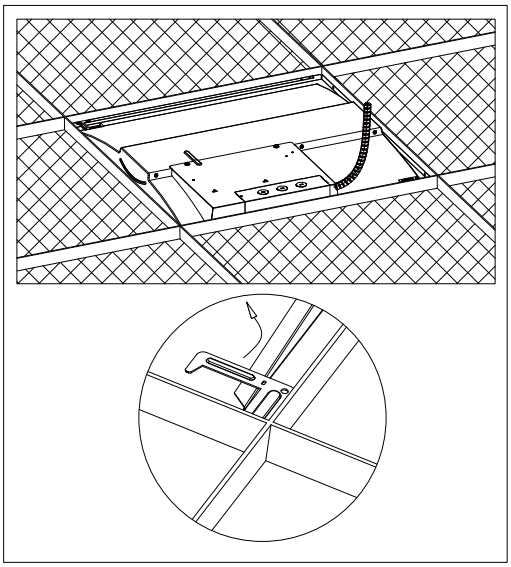

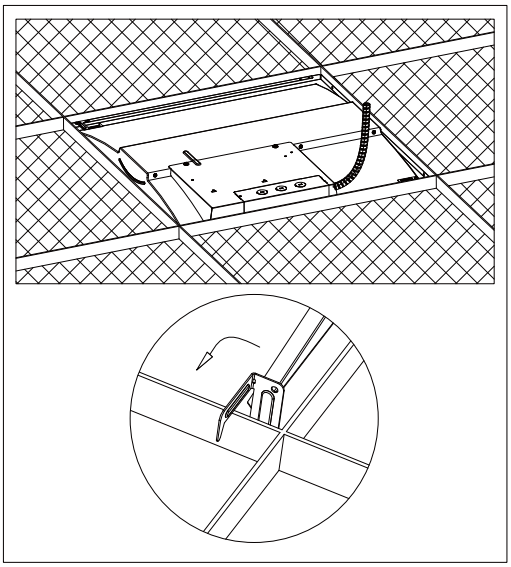

Packing/Weight

Part NO.	Outer Carton Size (L*W*H)	Qty/Carton (pcs)	Net weight (kg)	Gross weight (kg)
TAA22	648*140*653mm 25.51"*5.51"*25.71"	2	5.4KG 11.90LB	6.6KG 14.55LB
TAA24	1257*140*653mm 49.49"*5.51"*25.71"	2	9.8KG 21.61LB	11.7KG 25.79LB

Applications

office

office

home

Warning

* Make sure the distances between live part and metal part of LED troffer can satisfy reinforced or double insulation.
* The luminaire should only be installed by a qualified electrician.
* Before installation and maintenance of the LED troffer, please disconnect the power to prevent electric shock.
* Before installation and maintenance, LED troffer must be operated by professional and technical personnel, non-professionals do not to remove the light .
* The LED troffer must be installed in an appropriate environment to work. In harsh environments may shorten the life or even damage the light .
* For type Y attachments:If the external flexible cable or cord of this luminaire is damaged, it shall be exclusively replaced by the manufacturer or his service agent or a similar qualified person in order to avoid a hazard.