4FT LED Moisture Proof Tube

Features

-Warranty: 5-year limited warranty.
-Flicker free, eyesight protection.
-Efficiency:140Lm/
-Driver end-cap,easy replacing
-Input voltage:100-277V
-Instant on/off, no noise/UV/shadow

LED | 5CCT | 3Wattage | Triac dimmer | <1sec | 50000h | 5 YEAR Replacement Warranty

Super bright 4FT LED moisture proof tube is with super brightness SMD2835, which has higher lumen efficiency and perfect lighting performance.With flicker free driver, instant start, no radiation. no noise, no mercury and other material that is harmful to human body and environment

Applications:

-Fluorescent Retrofitting
-New Construction
-Warehouse Lighting
-Commercial Lighting

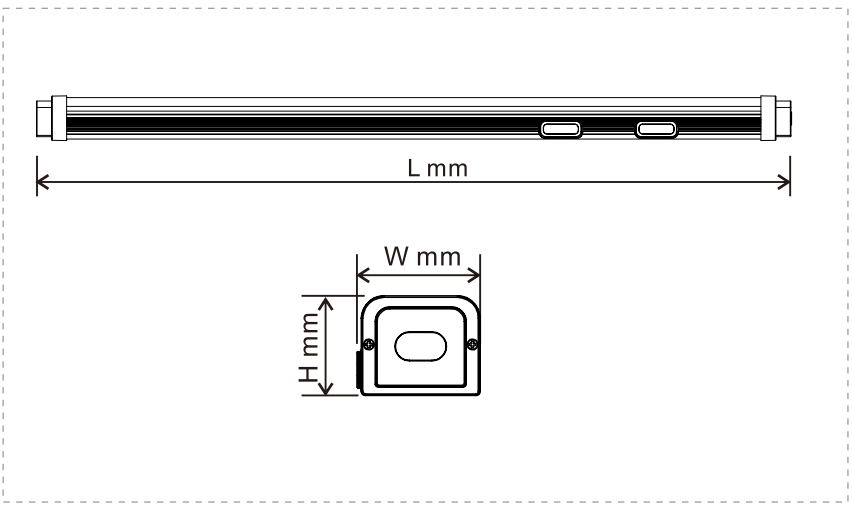

Model No	TXD-ER120B-F10W-B-T TXD-ER120B-F25W-B-T TXD-ER120B-F40W-B-T	TXD-ER240B-F24W-B-T TXD-ER240B-F50W-B-T TXD-ER240B-F80W-B-T
LED Wattage	10W/25W/40W	24W/50W/80W
Inpt Voltage	AC100-277V 50/60Hz	AC100-277V 50/60Hz
Color Temperature	Adjustable 5CCT: 3000K/ 4000K/5000K/5700K/6500K	Adjustable 5CCT: 3000K/ 4000K/5000K/5700K/6500K
Light Efficiency	>120Lm/W	>120Lm/W
CRI	Ra≥80	Ra≥80
PF	>0.9	>0.9
Beam Angle	120°	120°
IP Grade	IP55	IP55
Lifetime	50,000 hours	50,000 hours
Operating Temp	-20℃~+45℃	-20℃~+45℃
LED	SMD2835	SMD2835
Material	Aluminum+PC	Aluminum+PC
Size(L*W*H)mm	1175*44*35mm	2375*44*35mm

Available size

Model	Dimension(mm)	Wattage	Option		Carton weight ((LBs)		Carton Size (in)	Qty/CTN	20GP (pcs)	40HQ (pcs)
			PC	Color	N.W/CTN	G.W/CTN				
TXD-ER120B-F40 W-B-T	L1213xW40xH35	10W/25W/ 40W	Milky	CCT	20.6	22.8	48.62X11.02X7.48	20	7440	16900
TXD-ER240B-F40 W-B-T	L2413xW40xH35	24W/50W/ 80W	Milky	CCT	40.7	44	94.88X11.02X7.48	20	3660	7280

product label

packaging

Standard accessories

stainless steel buckleX2 | Rubber Stopperx2 | screwX2 | end capX1 | two-core waterproof connectorX1 | 1FT waterproof plug connector cableX1

Optional accessories

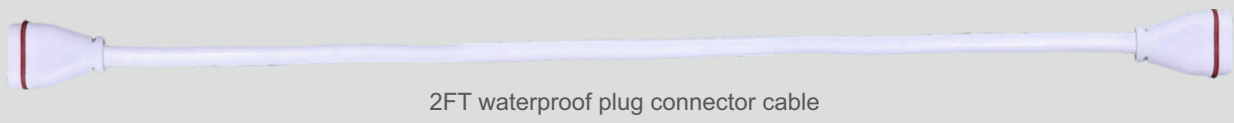

2FT waterproof plug connector cable