ASTRELIGHTS INC

LED GARAGE & CANOPY LIGHT - CP08 Series

Adjustable + Switchable + Photocell + Occupancy Sensor

Rev.05/17/25

Description

RZ's LED canopy lights are versatile and energy saving fixtures, which are ideal for covered parking area, garages, walkways, and entrances. It comes with CCT and wattage selectable, allowing you to customize the LED light output to best fit your project. These products are energy-efficient replacements of existing surface mount products.

Application

- Covered Parking area
- Garages
- Walkways
- Gas station
- Entrances

Certificate

- UL (Pending)
- DLC (Pending)

5WATTS SELECTABLE | 3CCT SELECTABLE | UL CERTIFIED | DLC LISTED PREMIUM | PIR | Microwave | 3 in1 PHOTOCELL | IP65 | 5 YEARS WARRANTY

ASTRELIGHTS INC

LED GARAGE & CANOPY LIGHT - CP08 Series

Key Features

- DLC category meet both Canopy & Garage.
- 3CCT(3000/4000/5000K) and 5Wattages Selectable offer SKU reduction.
- 4-in-1 Color Temperature, Power, integrated Photocell ON/OFF, and integrated Occupancy sensor ON/OFF switch.
- 3-in-1 Color Temperature, Power, and integrated Photocell ON/OFF switch.
- Quick installation with flip-open cover.
- Plug-in sensor receptacle and Zhaga sensor receptacle optional.
- 120-277 VAC & 120-347 VAC for options.

Flip-open cover design

Makes mounting to a recessed junction box or conduit entry point both quick and trouble-free.

Die-cast aluminum housing provides great heat dissipation

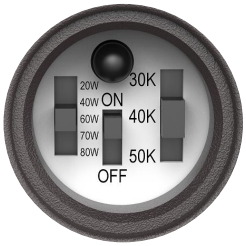

3-in-1 Switch Button

- CCT Selectable
- Wattage Selectable
- Photocell ON/OFF

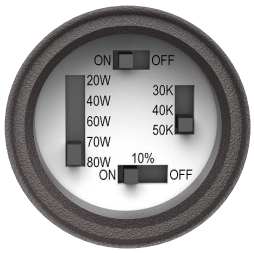

4-in-1 Switch Button

- CCT Selectable
- Wattage Selectable
- Photocell ON/OFF
- Motion sensor ON/OFF

CP08/CP08R: Polycarbonate lens achieve 135° beam angle meet both Canopy & Garage DLC category.

CP08: Polycarbonate lens achieve 145° beam angle meet Garage DLC category.

CP08F: Polycarbonate lens achieve 110° beam angle meet Canopy DLC category.

Microwave Motion sensor/PIR sensor

ASTRELIGHTS INC

LED GARAGE & CANOPY LIGHT - CP08 Series

Performance Summary

Model NO. #	Watts	CCT	LPW	Lumens(±10%)	Voltage	DIM	CRI	Beam Angle
CP08-10-80Z-AD5C3	80/70/60/40/20W Selectable	3CCT Selectable 3000K 4000K 5000K	150lm/W	12000lm @80W	120-277V 120-347V	0-10V	CRI>80	135°/145°
CP08-10-75Z-AD5C3	75/65/55/40/20W Selectable		155lm/W	11600lm @75W				135°/145°
CP08R-10-80Z-AD5C3	80/70/60/40/20W Selectable		150lm/W	12000lm @80W				135°
CP08R-10-75Z-AD5C3	75/65/55/40/20W Selectable		155lm/W	11600lm @75W				135°
CP08F-10-75Z-AD5C3	75/65/55/40/20W Selectable		130lm/W	9750lm @75W				110°

Remarks: 1. All above efficacy and lumens are subject to CRI>80 @5000K , please check IES files for accurate data.
2. CP08-10-80Z-AD5C3, Z denotes voltage, L=AC120-277V, M=AC120-347V; A denotes function, S = microwave motion sensor, S1 = PIR sensor, S2 = Photocell, E = emergency driver, M = Microwave motion sensor & emergency driver, M1 = PIR sensor & emergency driver, M2 = Photocell & emergency driver; D5C3 denotes 0-10V dimming, 5 wattage selectable, and 3 CCT selectable.
3. CCT & Power Selectable models ship preset at the highest CCT and the highest wattage.
4. Factory default settings for Photocell and Microwave motion sensor are ON.

Performance

- LED Type: SMD2835
- Frequency: 50/60Hz
- THD: <20%
- Power Factor: ≥0.90
- IP Rating: IP65
- Operating Temp.: −40°F to 113°F (-40°C to +45°C) for Standard, 32°F to 104°F (0°C to +40°C) for EM version
- Surge Protection: L/N 6KV, L/N-P 6KV for Standard, L/N 1KV, L/N-P 2KV for EM version

Construction

- Lens: Polycarbonate
- Housing: Die-cast aluminum
- Finish: Bronze(Standard), Custom finishes available

Mounting

- Surface Mounting
- Pendant Mounting

Accessories (Sold separately)

Picture	Item #	Description
	ANT-5-4T	Sharkward Plug-in microwave motion sensor （not available for CP08F)
	ANT-6-4T	Sharkward Plug-in PIR sensor （not available for CP08F)
	ANT-5-4T-BLE-GE	Sharkward Plug-in bluetooth microwave motion sensor （not available for CP08F)
	ANT-6-4T-BLE-GE	Sharkward Plug-in bluetooth PIR sensor （not available for CP08F)
	ANT-5-ZT	Sharkward Zhaga microwave motion sensor （not available for CP08F)
	ANT-6-ZT	Sharkward Zhaga PIR sensor （not available for CP08F)
	ANT-5-ZT-BLE-GE	Sharkward Zhaga bluetooth microwave motion sensor （not available for CP08F)
	ANT-6-ZT-BLE-GE	Sharkward Zhaga bluetooth PIR sensor （not available for CP08F)
	RC-100	Sharkward remote controller （not available for CP08F)
	EMB08UY-260	8W Helpower emergency driver (For CP08 and CP08F, not available for CP08R)

Integrated Occupancy Sensor Settings

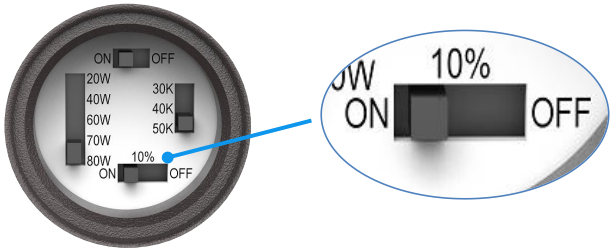

Sensor Datasheet	
Install height	Max 4 meters (13ft)
Detection distance	3-5 meters (10-16ft)
Hold time	10 minutes
Stand by brightness	10% (under 10% Dim Mode)

10% Dim

10% Dim Mode

The lights turn on when activity/motion is detected. After 10 minutes and no motion has been sensed, the light brightness is 10% lux standby. The minimum wattage is 5W.

Switch ON

Switch ON Mode

The lights turn on when activity/motion is detected. After 10 minutes and no motion has been sensed, the light shuts off completely.

Switch OFF

Switch OFF Mode

The motion sensor closed, no motion sensing function.

Product Dimension

(unit: mm & inch)

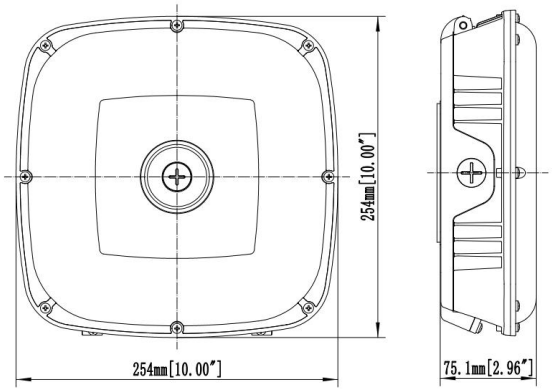

CP08

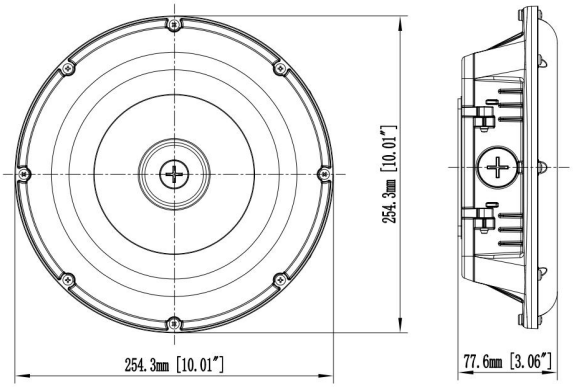

CP08R

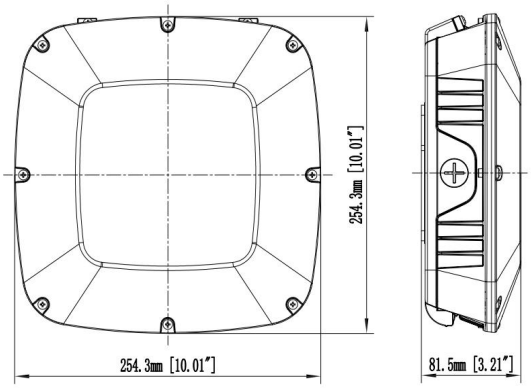

CP08F

Packing Info.

Product Size(inch & mm)	Product Weight (kg)		Package Weight (kg)		Carton Size(mm)	Q'ty/BOX (PCS)	Q'ty/CTN (PCS)	20GP (PCS)	40HQ (PCS)
	N.W./PC	G.W./PC	N.W./CTN	G.W./CTN					
CP08 (Standard) 10.00"*10.00"*2.96" 254.0*254.0*75.1mm	2.10	2.40	8.40	10.26	414*286*295	1	4	2968	7072
CP08 (EM version) 10.00"*10.00"*2.96" 254.0*254.0*75.1mm	2.58	2.88	10.32	12.18	414*286*295	1	4	2968	7072
CP08R (Standard) 10.01"*10.01"*3.06" 254.3*254.3*77.6mm	1.90	2.23	7.60	9.40	420*285*280	1	4	3488	8064
CP08F (Standard) 10.01"*10.01"*3.21" 254.0*254.0*75.1mm	/	/	/	/	/	1	4	/	/
CP08F (EM version) 10.01"*10.01"*3.21" 254.0*254.0*75.1mm	/	/	/	/	/	1	4	/	/