www.rzledlighting.com

# LED CANOPY LIGHT - CP05

## 15'' Sensor & CCT Selectable & Wattage Adjustable

Rev.2/13/25

## Description

RZ's LED canopy lights are versatile and energy saving fixtures, which are ideal for parking garages, entryways, gas stations, outdoor aisles and many other commercial applications. It comes with color and wattage selectable, allowing you to customize the LED light output to best fit your project. Energy and maintenance savings up to 86% versus HID solutions, and can be easily surface mounted.

## Application

- Covered Walkway
- Garages
- Warehouses
- Gas station
- Petroleum & Convenience Store

## Certificate

- UL
- DLC

3WATTS SELECTABLE | 3CCT SELECTABLE | CERTIFIED | DLC LISTED PREMIUM | IP65 | 5 YEARS WARRANTY

Add: 4F, Bldg. B, Zhongjing Sci-Tech Park, 606 Fengtang Blvd, Bao'an, Shenzhen, China 518103 | T: +86-755-27803791 | W: www.rzledlighting.com
**RZ Lighting Co., Ltd.** ***All Rights Reserved. Data subject to change without notice.***

www.rzledlighting.com

# LED CANOPY LIGHT - CP05

## Key Features

- Field-adjustable 3CCT & Wattages to reduce SKU's.
- Microwave motion sensor available.
- High efficiency up to 140LM/W.
- Perfect LED canopy lights to replace HID fixtures.
- Rugged die cast aluminum housing provides excellent heat dissipation.
- Wet location rated IP65.

## Performance Summary

| Model NO. # | Size (mm) | Watts | CCT | LPW | Lumens(±10%) | Voltage | CRI | Beam Angle |
|---|---|---|---|---|---|---|---|---|
| CP05-120L-X-YY | 381*381*83mm | 120W or 80W/100W/120W Wattage Selected | 4000K-6500K Single CCT | 140LM/W | 16800LM @120W | AC120-277V | >80 | 120° |
| CP05-150L-X-YY | 381*381*83mm | 150W or 100W/120W/150W Wattage Selected | 4000K-6500K Single CCT | 140LM/W | 21000LM @150W | AC120-277V | >80 | 120° |
| CP05-180L-X-YY | 381*381*83mm | 180W or 120W/150W/180W Wattage Selected | 4000K-6500K Single CCT | 140LM/W | 25200LM @180W | AC120-277V | >80 | 120° |
| CP05-150L-X-3CCT | 381*381*83mm | 150W or 100W/120W/150W Wattage Selected | 4000K/5000K/5700K 3CCT Selected | 140LM/W | 21000LM @150W | AC120-277V | >80 | 120° |

*Remarks: All above efficacy and lumens are subject to white finish @5000K.*
*CCT & Power Selectable models ship preset at the highest CCT and the highest wattage.*
*X denote control type, YY denote color temperature.*

Add: 4F, Bldg. B, Zhongjing Sci-Tech Park, 606 Fengtang Blvd, Bao'an, Shenzhen, China 518103 | T: +86-755-27803791 | W: www.rzledlighting.com
**RZ Lighting Co., Ltd.** ***All Rights Reserved. Data subject to change without notice.***

www.rzledlighting.com

# LED CANOPY LIGHT - CP05

## Performance

- LED Type: SMD2835
- Frequency: 50/60Hz
- Power Factor: ≥0.90
- IP Rating: IP65
- Life Time >50,000Hrs
- Operating Temp.: −40°F to 113°F (-40°C to +45°C)
- Surge Protection: L/N 6KV, L/N-P 6KV
- THD: <20%

## Construction

- Lens: Polycarbonate
- Housing: ADC12 Aluminum Die Casting
- Finish: White

## Mounting

- Surface Mount
- 3/4" Pipe Mount

## Accessories

**Microwave Motion Sensor apply to Zhaga Socket (DC12V, Haisen Brand)**

**Microwave Motion Sensor apply to Zhaga Socket (DC12V, Sharkward Brand)**

## Product Dimension

*(unit: mm & inch)*

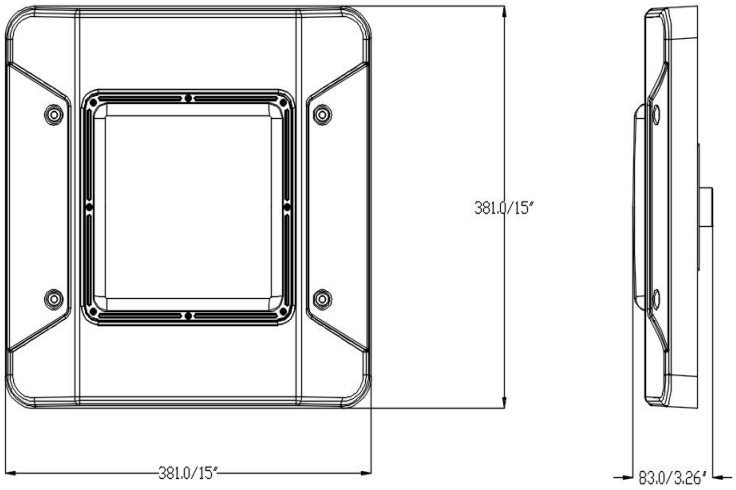


## Packing Info.

| Size | Product Weight (KG) | Package Weight (KG) | Carton Size (MM) | QTY/CTN (PCS) | 20GP (PCS) | 40GP (PCS) | 40HQ (PCS) |
|---|---|---|---|---|---|---|---|
| | N.W./PC | G.W./CTN | | | | | |
| 381*381*83mm | 4.5 | 5.5 | 455*455*130mm | 1 | 1040 | 2006 | 2526 |

Add: 4F, Bldg. B, Zhongjing Sci-Tech Park, 606 Fengtang Blvd, Bao'an, Shenzhen, China 518103 | T: +86-755-27803791 | W: www.rzledlighting.com
**RZ Lighting Co., Ltd.** ***All Rights Reserved. Data subject to change without notice.***