Photometric Test Report

Reference Standards

ANSI C82.77-10-2014
IES LM-79-2019
UL1598-2008

Prepared For

Foshan MLS Technology Co., Ltd.

No. 1-4 Industrial Road (North), Chancheng District, Foshan, Guangdong, 528000, CN
Vincent Deng, vincent.deng@ledvance.cn

Test Laboratory:
UL-CCIC Company Limited
Test Laboratory Address:
No.2, Chengwan Road, Suzhou Industrial Park, Suzhou 215122, China
Catalog Number
HBB-300S-UNV-8SC1-10V-90D-X-XX-M-XXX-PRO-y

Project Number
4791498147.1
Report Number
4791498147.1-6a

Test Date
2024-12-19~2025-01-09
Issue Date
2025-02-10
Revision Date
N/A

Prepared By	Approved By
Becky Fan	Roger Xu

The results contained in this report pertain only to the tested sample.
This report shall not be reproduced, except in full, without written approval of Underwriters Laboratories.
This report must not be used by the client to claim product certification, approval, or endorsement by NVLAP, NIST, or any agency of the U.S. Government. The laboratory is not responsible for the information which provided by customer, its authenticity can affect the validity of the result in the test report.

Test List

Sample Received Date: 2024-12-18

Test Item	Sample ID	Model Number	Tests Conducted By
Goniophotometer Test	7948570	HBB-300S-UNV-8SC1-10V-90D-L-BK-M-PRO	Ethan Chen
THD and PF Test	7948570	HBB-300S-UNV-8SC1-10V-90D-L-BK-M-PRO	Ethan Chen
In-Situ Temperature Measurement Test	7948570	HBB-300S-UNV-8SC1-10V-90D-L-BK-M-PRO	Ethan Chen

Remark (if any)

1. UL test equipment information is recorded on Meter Use in UL's Aurora database.

Product Description

Luminaire Description: High-Bay Luminaires (Commercial and Industrial)
Model Number: HBB-300S-UNV-8SC1-10V-90D-L-BK-M-PRO
Electrical Ratings and CCT: 120-277Vac, 50/60 Hz, 300W max, 3500K/4000K/5000K tunable
Driver Model Number: K1-320Y-260C
LED Package: BXVN-xxE-13H-9HV, Bridgelux Inc
Family Model and Variation: HBB-300S-UNV-8SC1-10V-90D-X-XX-M-XXX-PRO-y, where "X" represent mounting, can be L=Loop, H=Hook, U=U-bracket, P=Pendant. "XX" represent Finish color, can be BK= Black, WH=White, GY=Gray. "XXX" represent sensor receptacle, can be 3P=3 pins receptacle, AJ=Audio jack receptacle, blank= no sensor receptacle. "y" represents plug, P=cord with plug, blank=cord without plug.

Photos of Products Characteristics

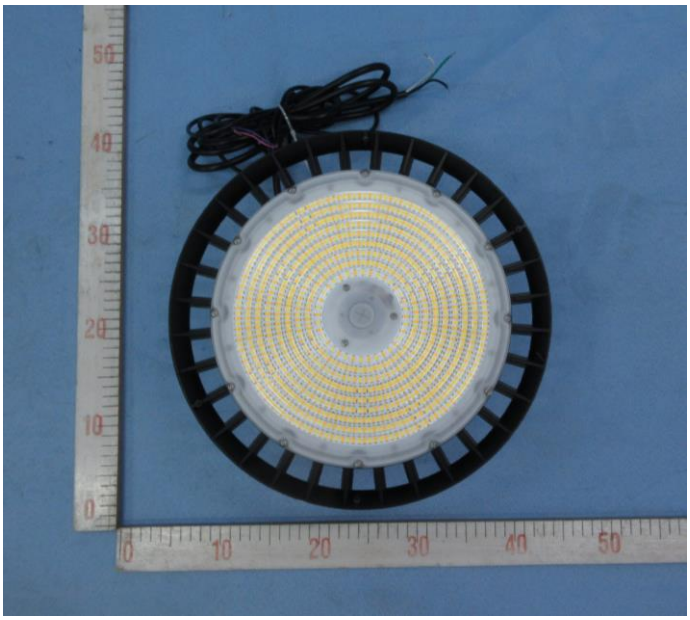

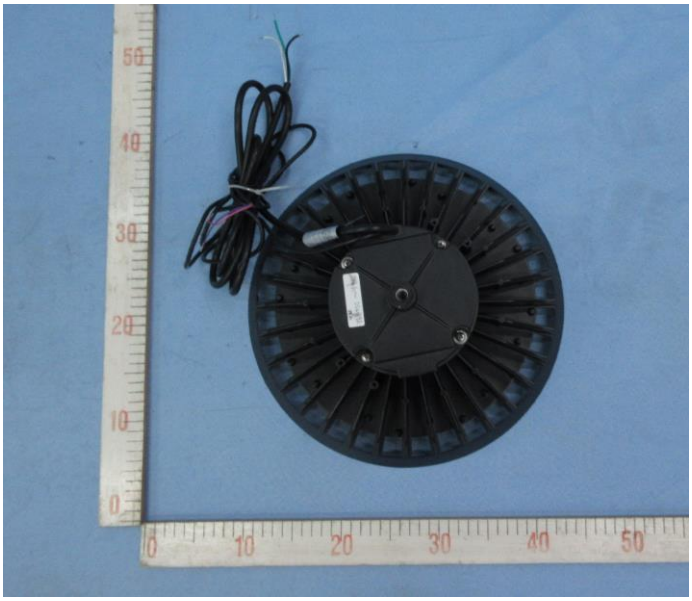

Goniophotometer Test

Model No.	HBB-300S-UNV-8SC1-10V-90D-L-BK-M-PRO	Sample ID.	7948570
Operate time (Min.)	65	Stabilization time (Min.)	50

Test Method

1.The sample was tested according to the IES LM-79-2019, and the product is assume to be brand new without seasoning.
2.Photometric parameters were measured using a type C goniophotometer and software.
3.The ambient temperature shall be maintained at 25 °C ± 0.9 °C, measured at a point not more than 1.5 m from the sample and at the same height as the sample. The reference standard lamp is power 400W omni-directional Incandescent lamp and was calibrated by National Institute of Metrology, China.
4.The samples were operated at rated voltage and was stabilized before measurement. Luminous flux, luminaire efficacy, zonallumen were calculated from the software taken at 1° vertical intervals and 22.5° horizontal intervals. Photometric distance was more than five times of the largest dimension of the test SSL product.

Goniophotometer Test Conditions

Temperature (°C)	Voltage (Vac)	Frequency (Hz)	Current (A)	Power (W)	Power Factor	Orientation
24.4	120.1	60	2.423	290.67	0.9988	Horizontal

Test Results

Zonal Lumen Requirement (20°-50°)	Field Angle (10%)		Beam Angle (50%)		Flux (lm)	Luminous Efficacy (lm/W)
	Horizontal Spread	Vertical Spread	Horizontal Spread	Vertical Spread		
66.4%	126.7	126.7	89.8	90.1	44631.9	153.5

UGR
27.6

Goniophotometer Test (Cont'd)

Polar Candela Distribution

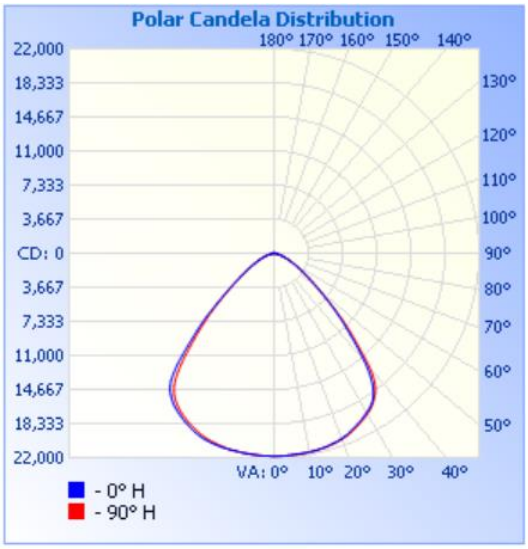

IsoCandela Plot

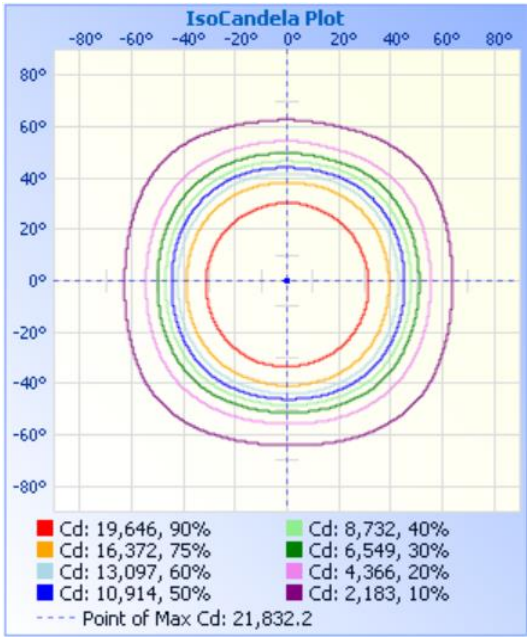

Goniophotometer Test (Cont'd)

Zonal Lumen Summary

Zonal Lumen Summary		
Zone	Lumens	% Luminaire
0-30	17,719.2	39.7%
0-40	29,301.3	65.7%
0-60	41,764.7	93.6%
60-90	2,757.1	6.2%
70-100	868.0	1.9%
90-120	18.8	0%
0-90	44,521.8	99.8%
90-180	110.1	0.2%
0-180	44,631.9	100%

Lumens Per Zone

Lumens Per Zone					
Zone	Lumens	% Total	Zone	Lumens	% Total
0-10	2,076.5	4.7%	90-100	3.5	0%
10-20	6,095.1	13.7%	100-110	5.0	0%
20-30	9,547.7	21.4%	110-120	10.3	0%
30-40	11,582.1	26.0%	120-130	15.2	0%
40-50	8,485.5	19.0%	130-140	17.9	0%
50-60	3,978.0	8.9%	140-150	19.8	0%
60-70	1,892.7	4.2%	150-160	18.5	0%
70-80	745.3	1.7%	160-170	14.2	0%
80-90	119.1	0.3%	170-180	5.8	0%

Goniophotometer Test (Cont'd)

Intensity Data(cd)

	0	22.5	45	67.5	90	112.5	135	157.5	180	202.5	225	247.5	270	292.5	315	337.5	360
0	21829	21829	21829	21829	21829	21829	21829	21829	21829	21829	21829	21829	21829	21829	21829	21829	21829
1	21821	21798	21807	21801	21808	21815	21815	21807	21815	21807	21808	21814	21798	21796	21802	21799	21808
2	21830	21807	21810	21809	21807	21810	21811	21812	21806	21810	21796	21802	21797	21795	21799	21792	21797
3	21804	21796	21808	21800	21819	21823	21825	21827	21829	21818	21804	21806	21795	21780	21797	21781	21787
4	21790	21781	21782	21791	21797	21820	21832	21826	21824	21803	21793	21789	21777	21772	21777	21768	21776
5	21779	21758	21777	21778	21791	21795	21809	21803	21795	21780	21766	21756	21759	21751	21761	21762	21765
6	21757	21751	21755	21753	21769	21777	21795	21802	21787	21756	21740	21747	21742	21750	21753	21748	21752
7	21752	21750	21746	21751	21755	21760	21772	21773	21758	21735	21728	21727	21732	21740	21748	21732	21744
8	21745	21743	21742	21721	21738	21747	21747	21749	21743	21714	21712	21720	21720	21729	21734	21733	21742
9	21732	21741	21731	21722	21719	21740	21736	21741	21716	21702	21705	21704	21713	21720	21731	21734	21740
10	21723	21734	21725	21707	21709	21708	21714	21716	21697	21690	21690	21688	21690	21697	21714	21711	21718
11	21702	21710	21706	21696	21691	21675	21689	21689	21678	21668	21673	21665	21673	21674	21684	21685	21700
12	21672	21690	21685	21668	21674	21664	21667	21678	21658	21650	21649	21640	21646	21650	21649	21650	21677
13	21635	21650	21662	21647	21647	21640	21644	21654	21644	21638	21617	21609	21614	21612	21613	21617	21637
14	21591	21598	21619	21606	21622	21617	21620	21624	21631	21614	21589	21572	21564	21555	21562	21570	21590
15	21544	21540	21563	21566	21585	21576	21588	21608	21607	21575	21548	21520	21504	21498	21499	21515	21534
16	21480	21487	21508	21510	21526	21533	21551	21575	21555	21539	21501	21463	21452	21439	21430	21462	21472
17	21428	21419	21436	21441	21460	21479	21487	21535	21537	21496	21438	21399	21393	21369	21371	21391	21414
18	21372	21347	21377	21377	21407	21424	21451	21496	21486	21446	21391	21342	21325	21305	21298	21323	21345
19	21301	21279	21308	21313	21346	21365	21397	21445	21438	21393	21332	21284	21273	21248	21231	21255	21284
20	21218	21199	21230	21252	21270	21296	21338	21386	21391	21324	21260	21217	21200	21172	21156	21186	21217
25	20578	20633	20662	20708	20717	20782	20843	20878	20884	20825	20724	20657	20626	20581	20561	20578	20585
30	19823	19768	19840	19914	19973	20039	20122	20193	20157	20096	20009	19933	19858	19753	19721	19737	19773
35	18569	18447	18555	18663	18817	18925	19044	19247	19169	19157	18985	18840	18694	18504	18466	18572	18588
40	15026	15522	15465	15650	15820	16152	16524	16579	16813	16648	16314	15876	15508	15448	15428	15264	15321
45	10376	10722	10681	10791	10891	11118	11442	11392	11655	11533	11447	11085	10836	10754	10625	10358	10326
50	6667	6694	6572	6676	6828	6923	7052	7083	7178	7177	7122	6948	6944	6789	6540	6289	6373
55	4353	4206	4149	4189	4302	4408	4393	4426	4449	4540	4389	4362	4407	4319	4026	3945	4004
60	2902	2773	2790	2778	2818	2934	2882	2886	2941	2992	2883	2889	2907	2878	2674	2614	2647
65	1807	1801	1840	1821	1861	1916	1921	1927	1933	1978	1908	1913	1913	1886	1752	1726	1746
70	1055	1143	1163	1155	1182	1218	1238	1252	1242	1265	1212	1235	1228	1198	1115	1110	1118
75	607	634	676	673	690	705	695	697	726	722	697	698	706	688	643	626	629
80	320	301	312	315	324	331	333	334	344	347	336	334	335	324	302	295	293
85	92	69	63	67	74	81	87	91	94	98	95	92	88	79	71	64	59
90	4	3	4	3	3	4	3	3	3	3	3	4	4	3	4	4	3
95	4	3	4	3	3	4	2	3	3	3	4	4	3	3	4	3	4
100	3	4	4	4	3	3	4	3	4	3	4	3	3	4	3	3	4
105	4	5	5	5	5	5	5	4	4	4	4	4	4	4	5	5	5
110	7	7	8	7	7	8	7	6	6	6	7	7	7	6	7	7	7
115	11	11	11	11	11	11	10	10	10	10	10	10	10	10	10	10	11
120	14	16	15	16	16	15	15	14	15	14	14	14	14	14	12	13	15
125	15	16	18	18	18	18	18	17	17	17	17	17	17	17	15	15	16
130	18	19	20	20	20	21	20	20	19	20	20	20	21	20	19	18	19
135	23	23	23	23	24	23	23	23	23	23	23	23	23	24	23	22	23
140	27	28	28	28	28	27	27	27	27	27	27	27	27	27	27	27	27
145	32	32	33	32	32	32	32	31	32	31	31	32	32	32	32	32	32
150	36	36	36	36	36	36	36	35	36	36	36	36	36	36	37	36	37
155	40	41	40	40	40	40	40	40	40	40	40	40	41	41	40	41	41
160	45	45	45	44	44	44	44	45	45	44	45	45	45	45	45	45	45
165	50	51	51	49	50	50	50	51	51	51	51	51	51	51	51	51	52
170	58	58	57	56	57	57	56	58	57	57	57	58	58	57	58	58	58
175	63	63	62	62	62	62	62	62	62	62	62	63	62	62	62	62	62
180	63	63	63	63	63	63	63	63	63	63	63	63	63	63	63	63	63

Corrected UGR values generated per CIE 190-2010

UGR Table - Corrected

Reflectances											
Ceiling Cavity		70	70	50	50	30	70	70	50	50	30
Walls		50	30	50	30	30	50	30	50	30	30
Floor Cavity		20	20	20	20	20	20	20	20	20	20
Room Size		UGR Viewed Crosswise					UGR Viewed Endwise				
X=2H	Y=2H	25.6	26.9	26.0	27.2	27.6	25.9	27.3	26.3	27.6	27.9
	3H	26.3	27.5	26.7	27.9	28.2	26.7	27.9	27.1	28.2	28.6
	4H	26.5	27.6	26.9	28.0	28.4	26.9	28.0	27.3	28.4	28.8
	6H	26.6	27.6	27.0	28.0	28.4	27.0	28.0	27.4	28.4	28.8
	8H	26.6	27.5	27.0	28.0	28.4	27.0	27.9	27.4	28.4	28.8
	12H	26.6	27.5	27.0	27.9	28.3	27.0	27.9	27.4	28.3	28.7
4H	2H	25.8	26.9	26.3	27.3	27.7	26.2	27.3	26.6	27.7	28.1
	3H	26.8	27.6	27.2	28.1	28.5	27.1	28.0	27.6	28.4	28.9
	4H	27.0	27.8	27.5	28.2	28.7	27.4	28.2	27.9	28.6	29.1
	6H	27.2	27.8	27.6	28.3	28.8	27.6	28.2	28.0	28.7	29.2
	8H	27.2	27.8	27.6	28.3	28.7	27.6	28.2	28.0	28.7	29.1
	12H	27.1	27.7	27.7	28.2	28.7	27.5	28.1	28.1	28.6	29.1
8H	4H	27.1	27.7	27.5	28.2	28.7	27.4	28.1	27.9	28.5	29.0
	6H	27.2	27.7	27.7	28.3	28.8	27.6	28.1	28.1	28.7	29.2
	8H	27.3	27.7	27.8	28.2	28.8	27.7	28.1	28.2	28.6	29.2
	12H	27.3	27.7	27.8	28.2	28.8	27.7	28.1	28.2	28.6	29.2
12H	4H	27.0	27.6	27.5	28.1	28.6	27.4	28.0	27.9	28.5	29.0
	6H	27.2	27.7	27.8	28.2	28.7	27.6	28.1	28.2	28.6	29.1
	8H	27.3	27.7	27.8	28.2	28.8	27.7	28.1	28.2	28.6	29.2

Maximum UGR = 29.2

THD and PF Test

Model No.	HBB-300S-UNV-8SC1-10V-90D-L-BK-M-PRO	Sample ID.	7948570

Test Method

1. The samples were tested according to the ANSI C82.77-10-2014.
2. The ambient temperature condition was maintained at 25 °C ± 1 °C. The sample measurement was made using a digital power meter and power supply. The sample was operated at rated voltage and stabilized before measurement. The total harmonic distortion were calculated from the digital power meter.

Test Results

CCT Range	Voltage (Vac)	Frequency (Hz)	Current (A)	Power (W)	Power Factor	Current THD	Orientation
0%-3500K	120	60	2.421	290.5	0.9989	2.82%	Horizontal
	277	60	1.071	282.3	0.9510	8.87%	Horizontal
50%-4000K	120	60	2.325	278.9	0.9992	2.59%	Horizontal
	277	60	1.034	271.4	0.9474	8.81%	Horizontal
100%-5000K	120	60	2.439	292.4	0.9989	2.78%	Horizontal
	277	60	1.078	284.1	0.9516	8.82%	Horizontal

In-Situ Temperature Measurement Test

Model No.	HBB-300S-UNV-8SC1-10V-90D-L-BK-M-PRO	Sample ID.	7948570

Test Method

1. In-Situ Temperature Measurement Test is conducted according to the UL 1598-2008, Section 14.
2. The testing was conducted in a room with ambient temperature of 25 °C ± 5 °C. The apparatus construction followed those described in UL1598-2008 for normal temperature testing. Thermocouples were placed on the LED package in the locations indicated by LM-80 report. Thermocouples were placed on the LED driver case in the locations specified by the manufacture if necessary. The temperature was recorded after the lamp was operated by 7.5 hours.
3.The data and photos in LM-80 test report is provided by the customer. The data and photos in driver specification is provided by the customer.

In-Situ Temperature Measurement Test Conditions

Temperature (°C)	Voltage (Vac)	Frequency (Hz)	Current (A)	Power (W)	Power Factor	Orientation
26.4	120	60	2.423	290.5	0.9989	Horizontal

Test Results (LEDs)

Thermocouple Location	Manufacturer Declared Current (mA)	Temperature for Lighting source (°C)		LED Model Number	LM-80 Limit Current (mA)	LM-80 Limit Temp. (°C)
		Test result column 1	Test result (Correct to 25 °C)			
TMP of LEDs	100	91.2	89.8	BXVN-35E-13H-9HV	100	105
Ambient temperature	N/A	26.4	25.0			

Test Results(Driver)

Thermocouple Location	Temperature for Driver (°C)		Driver Model Number	Driver Limit Temp. (°C)
	Test result column 1	Test result (Correct to 25 °C)		
Tc of Driver	74.3	72.9	K1-320Y-260C	85
Ambient temperature	26.4	25.0		

TMP point in LM-80 report

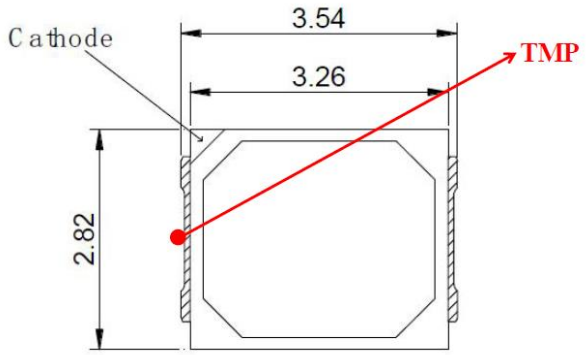

In-Situ Temperature Measurement Test (Cont'd)

Test Photos for TMP of LED Packages

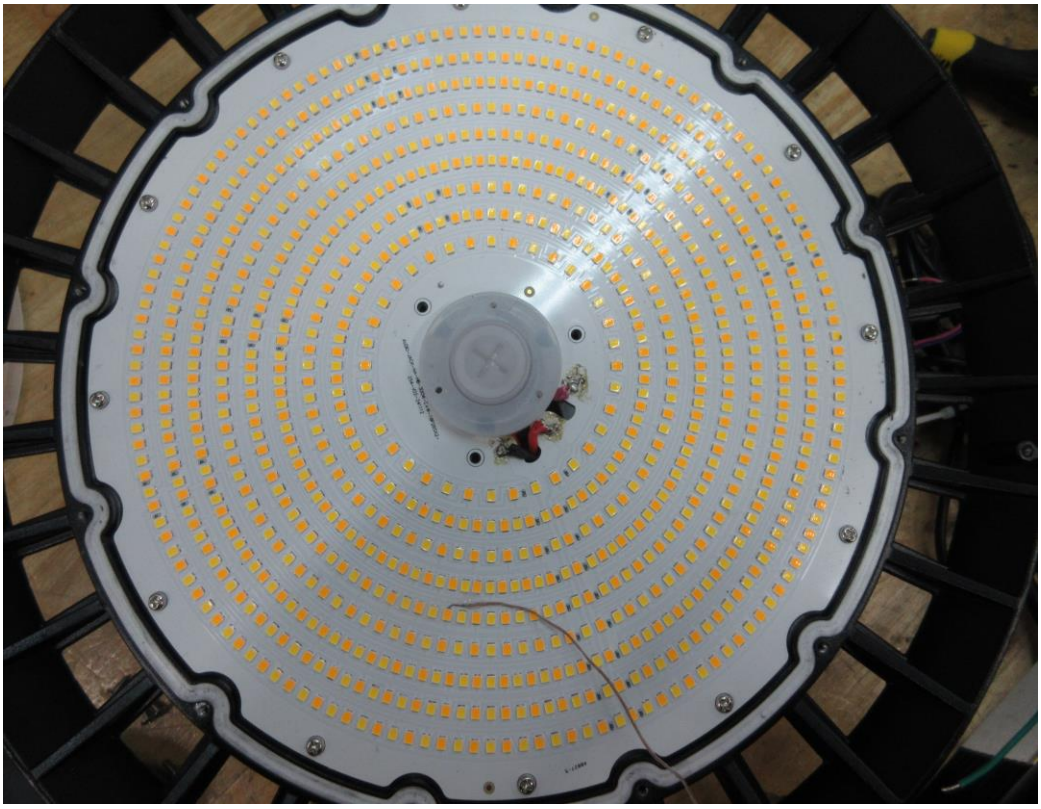

In-Situ Temperature Measurement Test (Cont'd)

Test Photos for Tc Point of Driver

******** END OF REPORT. THIS PAGE INTENTIONALLY LEFT BLANK ********