Button	Description	Button	Description	Button	Description
ON/OFF ON/OFF	1.Turn on or off light 2.Exit sensor mode and enter into ON/OFF mode.	Auto Auto	Press this button, enter into sensor mode and perform the last parameter, press this button and Auto Mode will show on LCD screen display, means commands received successfully.	Reset Reset	Press the button to enter into factory settings, means sensor starts to detect motion and turn on light automatically and only keep 5S holdtime then turn off the light.
Scenes Scenes	Press the button to choose in 4 optional scenes; parameters can be saved into each scene and directlly activate it.	Start Start	Press the button to start programming; the S icon will appear on the LCD screen, and disappear if no action within 10S, need to press it again.	Memory Memory	Press the button to save the parameters, the M icon will appear on the LCD screen, means parameters saved succesfully.
Apply Apply	Press the button to deliver the saved parameters to target sensors.	M H Mounting Height	Press the button to relatively adjust sensitivity from the sensor according to real Pinstallation height, make sensors working more perfectly in the environment.	Send Send	Press the button to deliver the last parameters, instead of"START-MEMORY-APPLY
Detection range	Press the button, the icon will flick on LCD screen display, then use +/- buttons to choose the wanted parameters.	Daylight sensor	Press the button, the icon will flick on LCD screen display, then use +/- buttons to choose the wanted daylight level; the max level is 400lux, --- means diasble, LEN means learning ambient brightness.	Stand-by dimming	Press the button, the icon will flick on LCD screen display, then use +/- buttons to choose the wanted standby dim level.
Hold time	Press the button, the icon will flick on LCD screen display, then use +/- buttons to choose the wanted holdtime.	UP	Press the button, numbers on LCD screen display gets higher till the wanted one appears.	Stand-by period	Press the button, the icon will flick on LCD screen display, then use +/- buttons to choose the wanted standby period; the min is 0S, the max is infinite.
CCT CCT	(Only supporting sensors with CCT tunable feature) Press the button, then icon will flick on LCD screen display, then use +/- buttons to choose from the saved CCT options(2700K, 3500K, 4000K, 5000K, 5700K, 6500K).	DOWN	Press the button, numbers on LCD screen display gets lower till the wanted one appears.	POWER POWER	Press the button, the icon will flick on LCD screen display, then use +/- buttons to choose wanted brightness level. *In ON/OFF mode, output dimming range is 10%-100%; In SENSOR mode, output dimming range is 60%-100%.
Reserved	This is a reserved button for future updates with unexpected feature.	Daylight Harvesting	Make parameters according to daylight harvesting conditions, then press this button to activate this function; DH-ON will show on LCD screen display.	Test Test	Press the button to quickly perform testing function, keep only 2S ON then OFF, till motion gets detected and turn on light again.

Operation Guide

1. How to quickly set multiple sensors to perform the same parameters?

Solution A:

At the first sensor - press AUTO to enter the SENSOR mode, press START to set parameters (detection area, holdtime, daylight threshold, standby dimming level and standby period), press MEMORY to save parameters, and press APPLY to send parameters. You will see light OFF then ON for once as command's received.

At the other sensors - press AUTO to enter the SENSOR mode and press APPLY to send parameters. You will see light OFF-ON for once as command's received.

Solution B:

Use the SCENE function if you have preset parameters - Press AUTO to enter the SENSOR mode, choose from the scene options (1, 2, 3, 4), and press SEND. You will see light OFF-ON for once as command's received.

2. In SENSOR mode, how to turn off the sensor function(disable sensor function)?

-When the light is ON, press ON/OFF to turn OFF the light, and press ON/OFF again to turn on the light, don't press any other buttons.

-When the light is OFF, press ON/OFF to turn on the light, don't press any other buttons.

3. How to perform SENSOR mode when sensors are already in ON/OFF mode?

Solution A:

Press AUTO to enter the SENSOR mode and perform the last parameter setting. The corresponding parameters will be displayed on the LCD screen.

Solution B:

Press RESET to enter the SENSOR mode and perform factory setting parameters. The corresponding parameters will be displayed on the LCD screen.

4. How to enter and exit TEST mode?

Enter: In any mode, after pressing TEST button, the sensor enters the TEST mode, means keeping the light ON for 2S, turns off the light, lights ON again after detecting motion and keeps 2S then OFF; keep running this way.

Exit: Press the ON/OFF button to turn off the light and exit the TEST mode directly;

Or press the RESET button to exit the TEST mode, enter the SENSOR mode and performing factory Settings;

Or press the AUTO button to exit the TEST mode, enter the SENSOR mode and performing the last parameter setting.

Trouble Shooting

1.This remote control uses infrared signal transmission, please stay pointing at the target sensor and keep controlling distance within 18M while using it.

2.The infrared signal of the remote control might get affected by the strong natural light brightness, and the remote control may not be able to use or the distance become closer; please try to shorten the distance to the sensor or use it when natural brightness fades.

3.After the LCD screen gets dark, it needs to be woken up again (any button can) before use.

4.The remote control is powered by 2pcs AAA batteries. When the words displayed on the LCD screen is incomplete or unclear, it indicates the battery may be dead, which will affect the remote performance. Please replace the battery.

Electric Parameters

Working Voltage	AAA battery * 2pcs (2.2-3V)
Screen OFF Duration	60S
Icon Flicking Duration	5S
S(start) button ON Duration	10S
M(Memory) button Flicking Duration	3S
Carrier Frequency	38KHz±2KHz
Operation Distance Max.	15M/49ft (3V)
Emission Angle	< 30 degree
Standby Current	<1.2uA
Working Current	<5mA
Peak Current	<30mA
Working Temp	-20℃~+60℃
Storage Temp	-30℃~+85℃
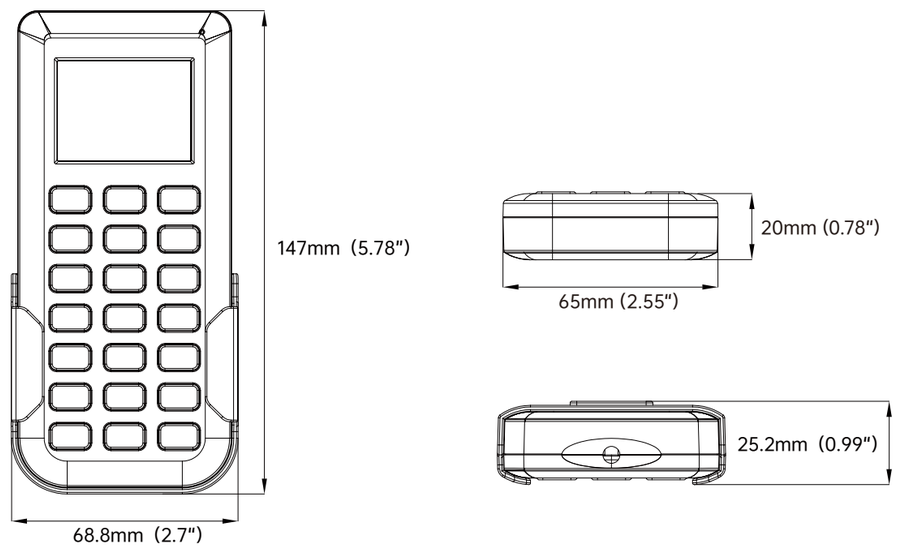
Dimensions