# PRODUCT SPECIFICATION

| | |
|---|---|
| MODEL NO | HD07VR-A-3 |
| INPUT | 12VDC |
| DESCRIPTION | PHOTOCELL SENSOR |
| CERTIFICATE | UL (E529048) |
| VERSION | V2.0 |

# 12VDC PHOTOCELL SENSOR

**DONGGUAN HAIYUE INTELLIGENT TECHNOLOGY CO.,LTD**
13th Floor, C1 Building, Songshan Lake Intelligent Valley,
Liaobu Town, Dongguan City, 523808, Guangdong.
Contact us info@haisensz.com
**www.haisensz.com**

Series Work of Art

All Rights Reserved by HAISEN

| | |
|---|---|
| WRITTEN BY | 夏勇 |
| CHECKED BY (R&D) | |
| CONFIRMED BY (SALES) | 周慕 |
| DATE | 2023.10.12 |

## Features & Benefits

# HD07VR-A-3

E529048

- Photocell Sensor, no Motion Detection.
- With Audio Jack, suitable for UFO highbay application.
- With UL certificate.

## Demensions Unit:mm

HD07VR-A-3

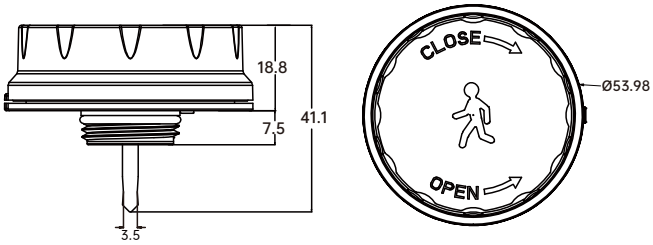


Receptacle

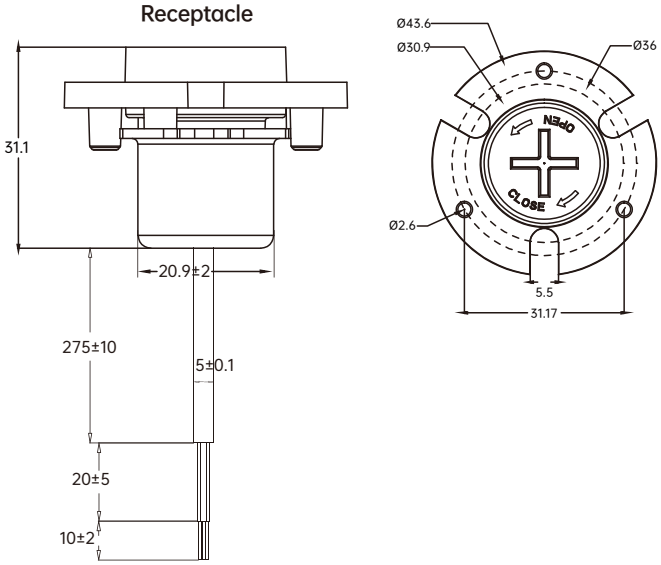


## Wiring Diagram

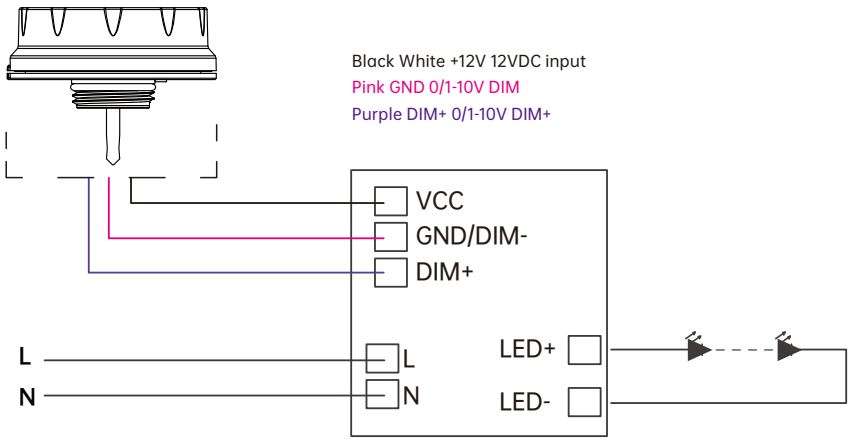


Receptacle

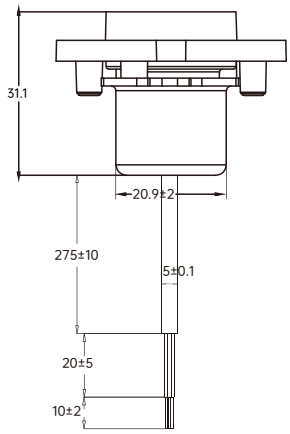

# Parameters

| Model NO. | | HD07VR-A-3 |
|---|---|---|
| Daylight Setting | Photocell | (Fixed Parameter) When ambient brightness darker than 20lux, sensor turns ON light; when it's brighter than 150lux, sensor turns OFF light |
| | Warranty | 5 Years |
| INPUT | Input Range | 12VDC |
| | Voltage Range | 10-15VDC |
| | Current | ≥30mA |
| | Stand-by Power | <10mA Power Consumption |
| OUTPUT | Signal | DIM 0-10V |
| | Connection | 12VDC input/ Black&White wire; DIM+/ Purple wire; DIM-/ Pink wire |
| ENVIRONMENT | Working Temp | -30°C~+70°C |
| | Storage Temp | -40°C~+80°C Humidity: 85% (non-condensation) |
| CERTIFICATE & STANDARDS | Certification | UL (E529048) |
| | Environmental Requirements | In accordance with CE ROHS |
| | IP Rating | IP65 |
| PACKAGE | Silk-Printing | Lasering |
| | Packing Description | 1pcs/white neutral box |
| | Qty/ctn(pcs) | 200 |
| | Net Weight/pcs (kg) | 0.05 |
| | Gross Weight/CTN (kg) | 11 |
| | Carton Size (cm) | 40*30*25 |

# Lux on/off

With Daylight priority function, HD07VR-A-3 is able to differentiate artificial light brightness from natural light after installed inside the fixture, and automatically turn off light when ambient brightness exceeds preset lux level.

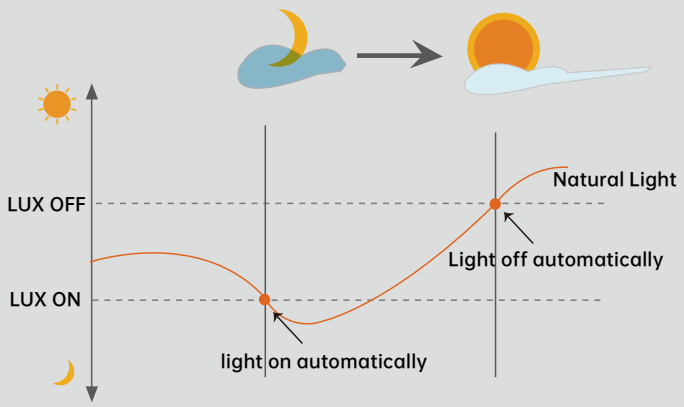

# Performance

Application——Lux on/off

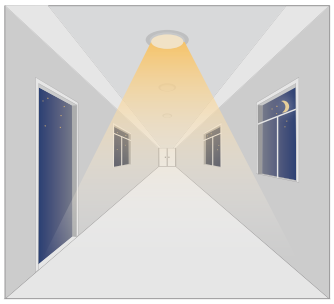

When ambient brightness is higher than preset lux level, light will automatically turn off.

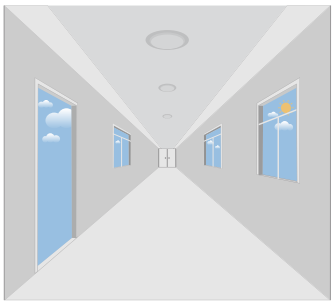

when is lower, than pre-set lux level light will turn on 100%.

Attention

1. The sensor should be installed by qualified electrician and ensure power is OFF before installation.
2. Please read the instruction carefully before using the product and keep it well for other users to read any time.
3. We reserve the right to modify any incorrect text, image and technical parameters.
4. Any unauthorized modification is forbidden. Otherwise all guarantees will be immediately invalid.
5. Product could be optimized without prior notice.

# APPLICATION NOTES

1. Suitable for indoor application, half/completely outdoor environment conditions might be captured as moving signals to trigger the sensor.
2. Suitable for ceiling mount installation, adjust sensitivity properly if it's installed on side-wall because it gets more sensitive.
3. Adjust sensitivity properly when the sensor is applied in small/narrow/metal-built/with metal spaces.
4. Microwave sensor can't be placed under/inside metal shell; Microwave module must directly face the detection area with edge lower than light fixture.
5. Keep the sensor away from vibration equipments, air-conditioning outlets, smoke extractors alike conditions to avoid unwanted trigger.
6. Keep the sensor module away from AC input and DC output to avoid high/low frequency signal interference.
7. At least 2m/6.5ft distance between microwave sensors; 1.5m/4.9ft between the sensor and other wireless devices such as routers to avoid possible radio interference.
8. Daylight testing delivered in bright day without shadow or specially designed lampshade or lens.
9. Dimming performance differs when connected to different drivers; If the driver can't completely turn OFF, sensor can't either.
10. Input power voltage must be stable with float less than 10%.
11. The first time powered ON sensor, light will be ON 100% for about 10S then dims to standby level or OFF.
12. Distance detection is delivered by testing person about 165cm in open area as reference, the result differs by size and speed of moving objects, mountng height and real-life situation.