24W Ceiling lamp in IP44

Lamily Corp

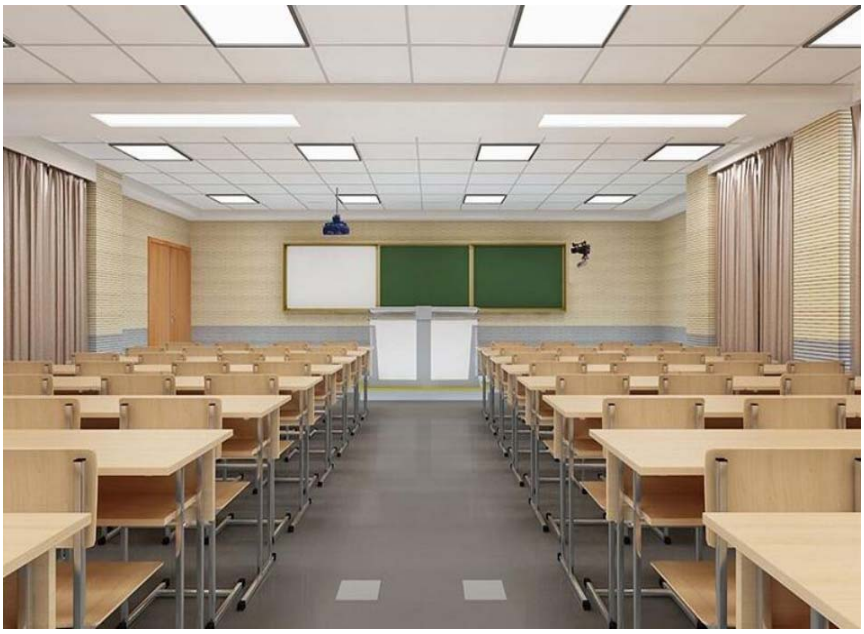

12’ round ceiling light is with side lighting design, which has higher lumen efficiency and perfect lighting performance. Super slim-only 16mm thickness, in elegant appearance, AC linear inside power supply, save your space. Surface mount installation easy operating, save labor.

High brightness, high CRI, perfect replacement for ceiling lamp, no noise, no mercury and other material that is harmful to human body and environment

Features

- Warranty: 5-year limited warranty.
- Flicker free, eyesight protection.
- Lumen:2300Lm
- IP rating: IP44
- Input voltage: 100-130V
- Certified : ETL
- Instant on/off, no noise/UV/light

Application Areas

Office & school lighting: office room, meeting room, class room etc.
Commercial lighting: shopping mall, super market, retailer shops etc.
Other situations: home, hospital, laboratory, dust-free workshop etc.

Product Image

Available size

Model	Dimension(mm)			Wattage	Product Weight (LBs)		Carton weight ((LBs)		Carton Size (in)	Qty/CTN	20GP (pcs)	40HQ (pcs)
	A	B	C		N.W/PC	G.W/PC	N.W/CTN	G.W/CTN				
BQ-YPL-M300	ϕ300X16mm			24W	1.5	1.8	30	36	18.9x13x13	20	10000	25200

`

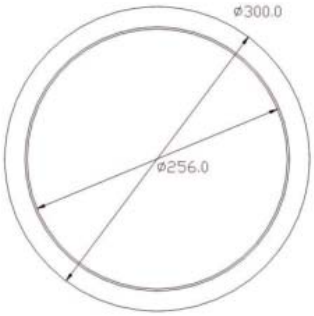

SCR

Intertek

120°

PF 0.9

CRI ≥ 80

HOURS 50000

Technical Data Sheet

Model No.	BQ-YPL-M300
Watt(W)	24W
Dimension(mm)	Φ 300X16mm
Input Voltage(V)	AC 100-130V
LED Model	135PCS SMD 2835/3V/135-140LM/W /Ra 80
CCT(K)	3000K/4000K/5500K
Efficiency (lm/W) ±5%	100lm/W
Luminous Flux(lm) ±5%	2300LM
Beam Angle (°)	120°
Working Temp.(°C)	-15℃ ~ +45℃
DIM	0-10V
IP Rating	IP44
Lifetime (hr)	>50000H
THD	<15%

Please turn off the power before installation

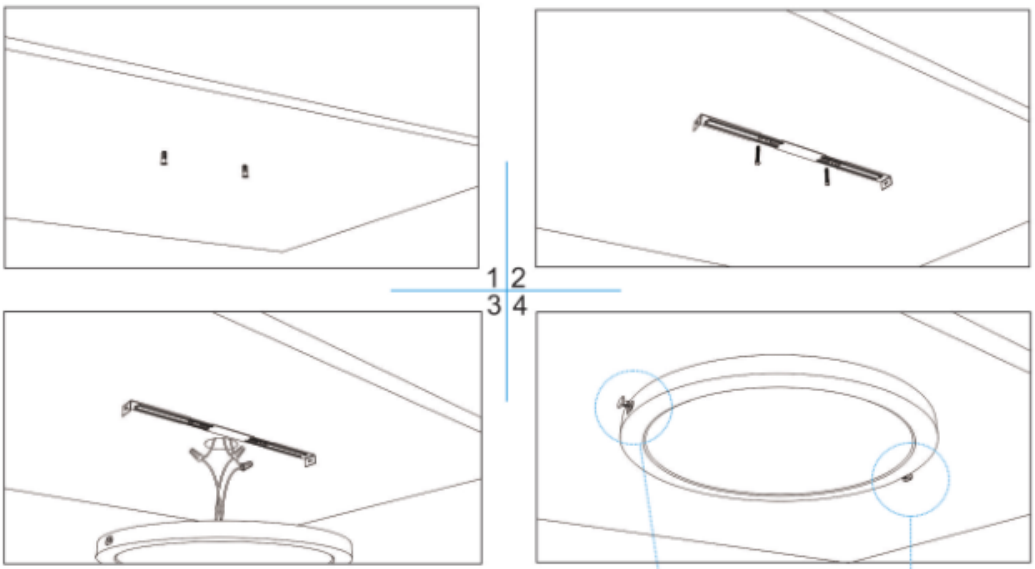
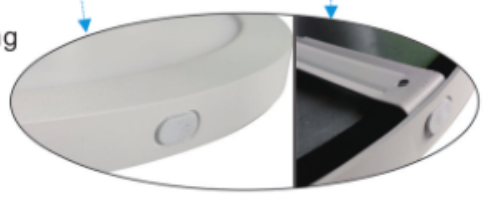
1. Fix the plastic expansion screw on the ceiling
2. Use screws fixing Bracket onto the ceiling
3. Connect power cable with P4 terminal
4. Fix the lamp on the bracket with the Buckle, and the installation is completed