Watts and CCT Selectable UFO High Bay Pro

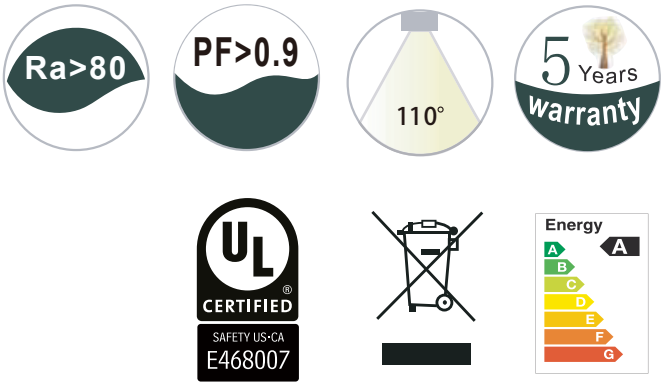

Features

1. Simple and stylish appearance.
2. Excellent heat dissipation.
3. DLC 5.1 Premium with high luminous efficacy and low UGR.
4. Branded driver and LED's.0-10V dimming
5. PnP sensor option.
6. Mounting options: hook/chain, pole pendent and surface mounting.
7. Round EM driver for fast installation.
8. Very complete accessories for option.
9. CCT(3500K-4000K-5000K).

Product Dimension

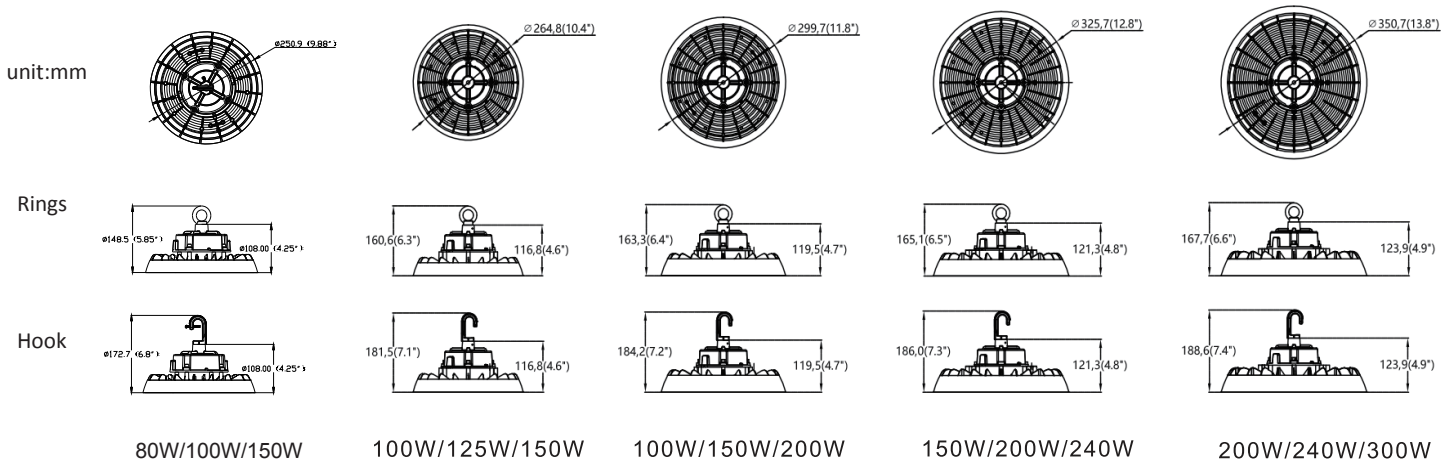

Lighting Parameters

Model Number	Wattage	Working Voltage	CCT	Lamp Bead Model	LED Driver	Beam Angle	Lighting Efficiency	Color Rendering Index	Operating Temperature	Storage Temperature	Environment Location	Life span	Lamp shell
ALI-UFO-150W-110-H1-TP-50K [Blank;(MS);(PIR);(BT)] ALI-UHB1220-240W-110-H-TP-50K [Blank,(MS),(PIR),(BT)]	80W/100W/150W 150w/200W/240W	AC 120~277V	4000K 5000K	2835	SOSEN Fahold	110°	135LM/W	Ra>80	-40°F~122°F -40°C~50°C	-40°F~158°F -40°C~70°C	Wet Location	≥50000H	Black & White

"XXX" can be any letter or number to represent light-emitting angle;
"X" can be H, L or HY (Y=number) to represent lighting effect (no effect to power);
"XXXX" can be TCP, TP or TC, TCP=Adjustable power and CCT, TP=Adjustable power, TC=Adjustable CCT;
"(XX)" can be (MS),(PIR),(BT) to indicate Microwave Sensor, PIR Motion sensor, Motion Sensor with Bluetooth or blank to indicate without Motion Sensor.

CCT and Watts selected Operation Manual

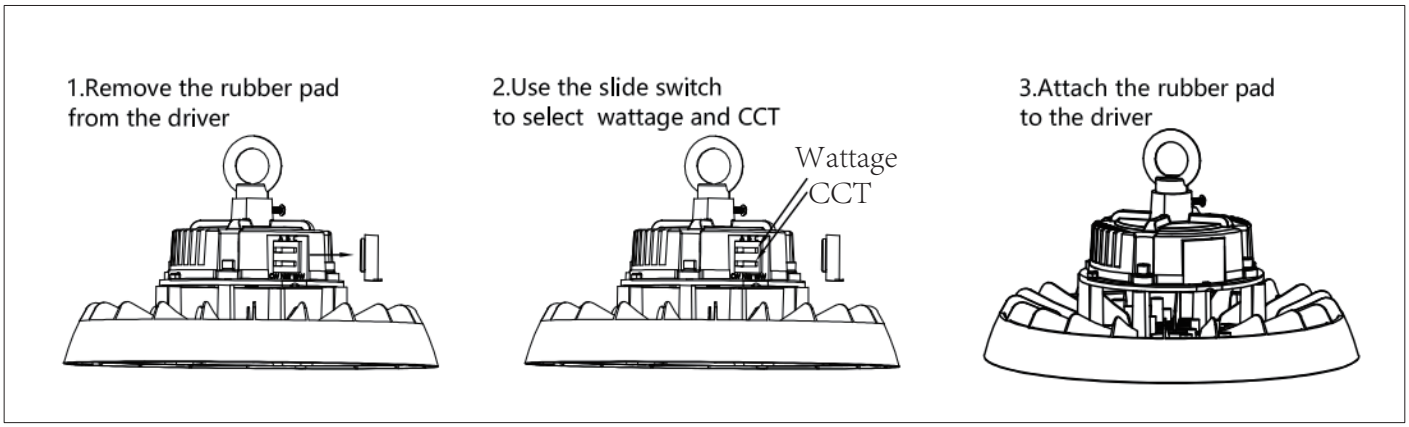

Installation Instruction

1. Rings type:

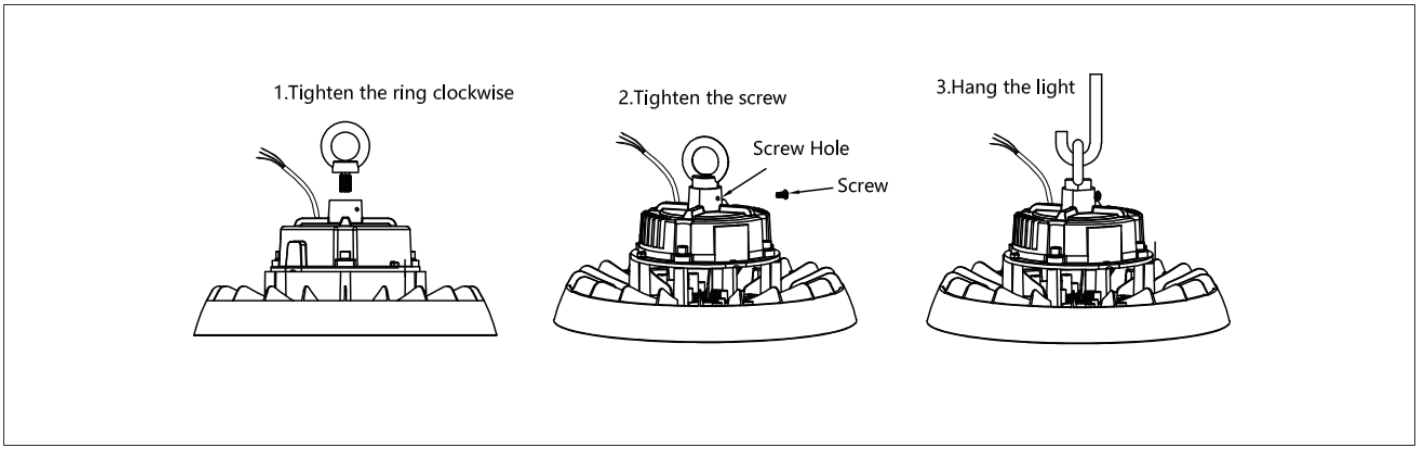

2. Hook type:

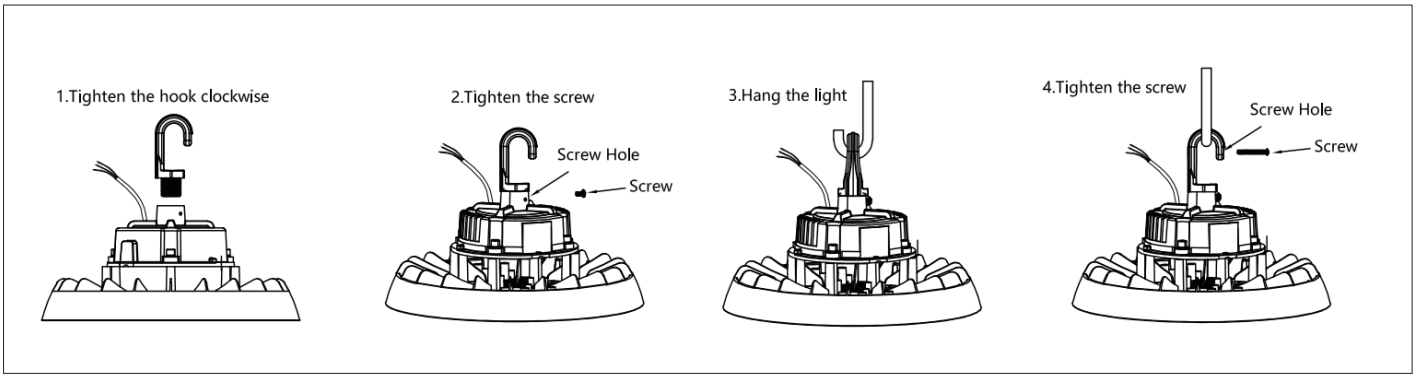

Packing information

Power	Outer box (L*W*H)	Oty/Ctn (pcs)	N.W./Ctn (kg/lbs)	G.W./Ctn (kg/lbs)	Remarks
100W	11.73''x11.73''x6.5''(298*298*165mm)	1	1.40/3.09	2.22/4.85	2M cable
150W	12.01"x12.01"x6.89" (305*305*175mm)	1	1.75/3.56	2.75/6.06	
200W	14.49"x14.49"x6.97" (368*368*177mm)	1	2.10/4.63	3.25/7.17	
240W	15.43"x15.43"x7.09" (392*392*180mm)	1	2.50/5.51	3.72/8.20	
300W	16.46"x16.46"x7.17" (418*418*182mm)	1	2.80/6.17	4.05/8.93	

Applications

Industrial application:
Warehouse,Factory etc.

Commercial application:
Exhibition Room,Gas Station,
Supermarket etc.

Note

1. Any form of installation/uninstallation or maintenance and electrical work must only be performed by a qualified electrician.
2. All wiring should be done after cutting off the power.
3. The UFO high bay light must be grounded.
4. Always keep the lens/diffuser of UFO high bay light cleaned to maintain good light transmission.
5. Always keep the shell of UFO high bay cleaned to maintain good heat dissipation.
6. Cleaning must only be done with dry or wet cloth and the high bay should not be exposed to corrosive substance.
7. High voltage inside the fixture,please do not disassemble it,Serious electric shock may occur otherwise.