Lamily Corp

LED Linear High Bay

Ra>80 PF>0.9 110° 5 Years warranty

Product Features

1. ETL & FCC listed; With LM79 & LM80;
2. 225W-300W available;
3. High luminous efficacy 135lm/w;
4. High quality non-isolated driver; 1-10V dimming; Flicker free;
5. PF＞0.90, driver efficiency＞90%; THD<20%;
6. Installation: chain mounting;& Pedant Mounting
7. Suitable for dry/damp location;
8. Designed for warehouses, gymnasiums, and industrial spaces;
9. Five years warranty.

Product Dimension

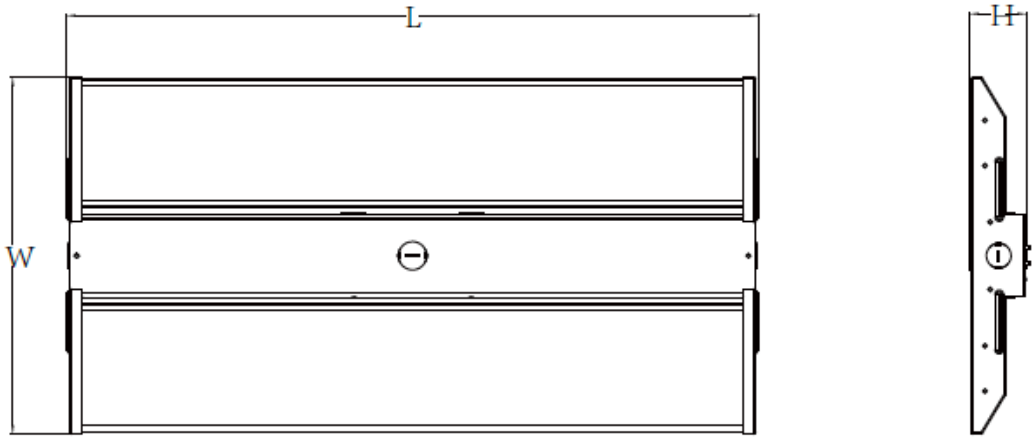

Model	L×W×H
KLL-LHB5-2FT220W	626*323*51mm/24.65*12.8*2"
KLL-LHB5-4FT300W	1166*323*51mm/45.9*12.8*2"

Specification

Part No.	Power	Input Voltage	Luminous	Luminous Efficacy	CCT	Viewing Angle	Ra	PF	Warranty
KLL-LHB5-2FT220W-XXK-TP(XX)	220/165/120W	AC120-277V	29700lm	135lm/W	4000K 5000K 5700K 6500K	90°	>80	>0.9	10 Years
KLL-LHB5-4FT300W-XXK-TP(XX)	300/225/165W		40500lm						

XX means CCT, can be any two digits,
(XX) can be MS or blank, MS=motion sensor, blank=no motion sensor,

Testing Report

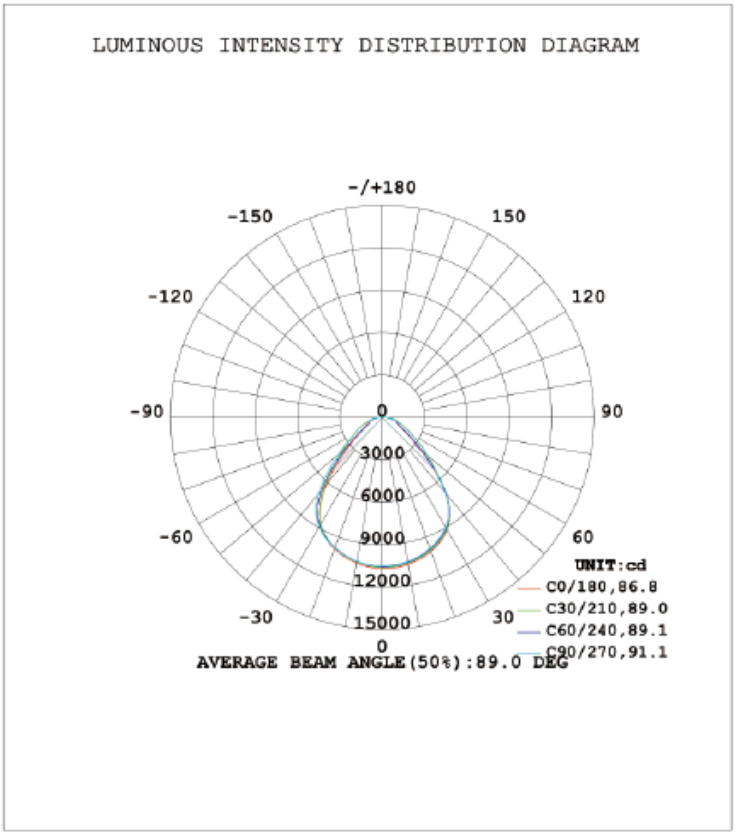

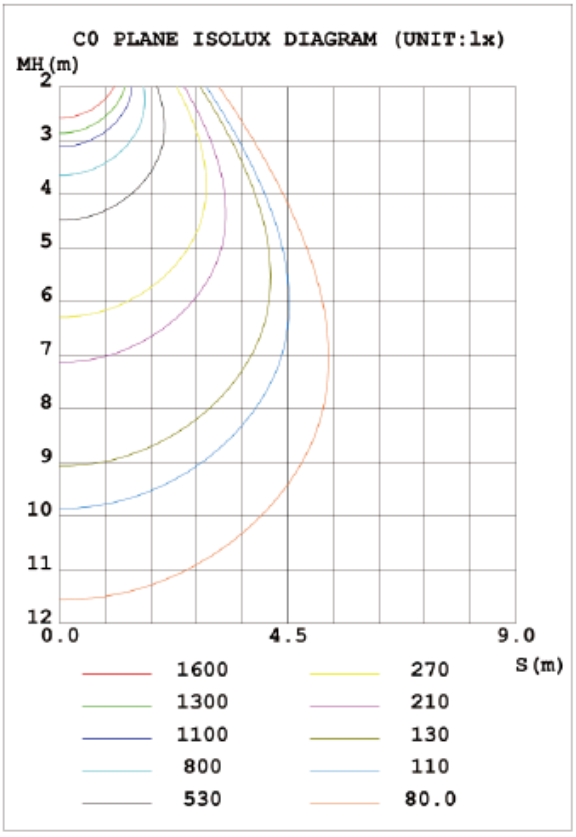

Chain Installation

1.Hook the chain as below pic.

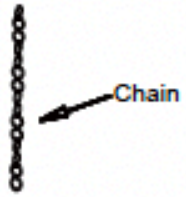

2.Insert the hook into the slotted holes, as shown below.

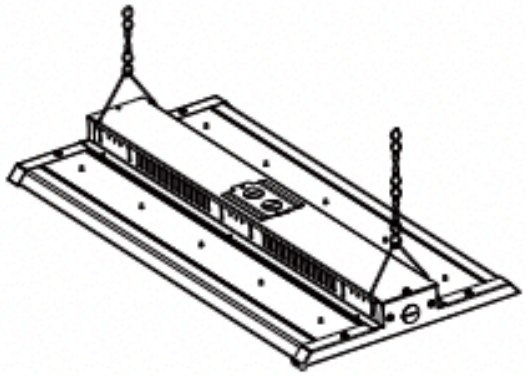

3.Hook up the chain on the ceiling anchor.

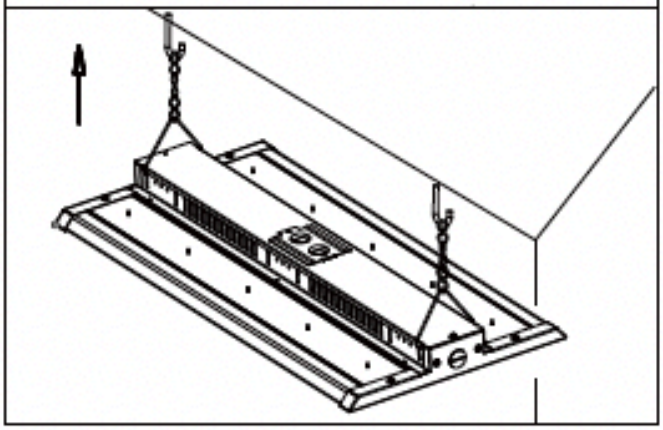

4.Turn off power,and make wiring connections with terminal cap(see wiring instrucion below).

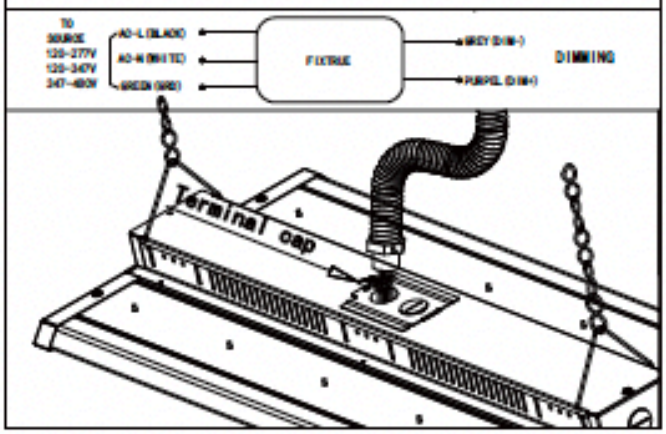

5.Insert the terminal cap and wires into the driver box.

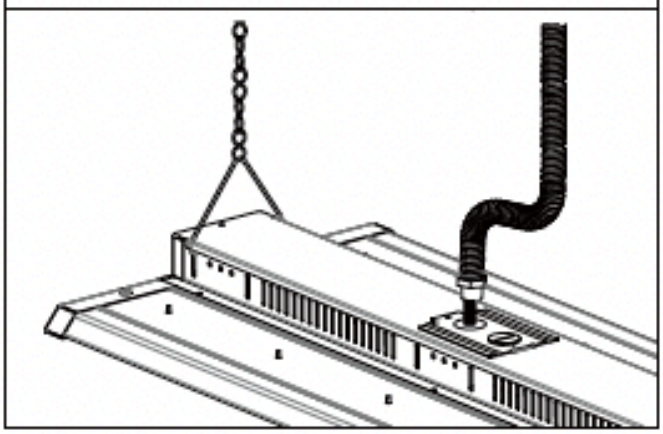

6.Insert the wire terminal joint to the wire entry. Installation completed.

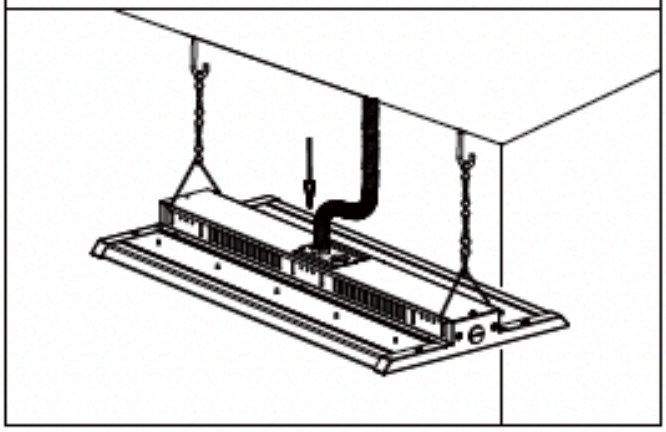

Pole Mounting Installation Instruction

1.Screw the conduit mounting bracket to the fixture.

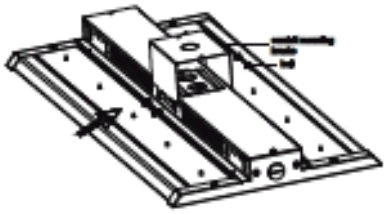

2.Lock the conduit with flat washer + spring washer +nut on the mounting bracket.

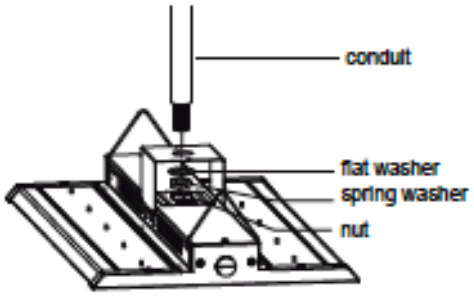

3.Wiring according to the circuit diagram.

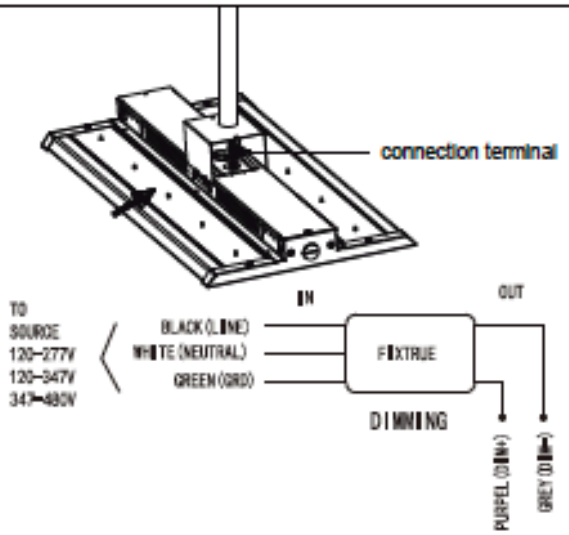

4.Screw the side covers to conduit mounting bracket.

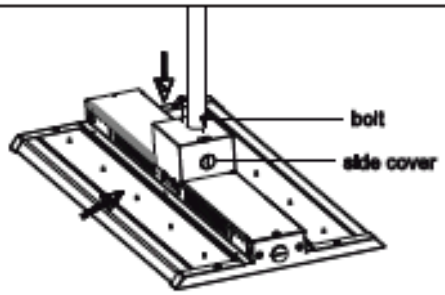

5.Pole Mounting installed.

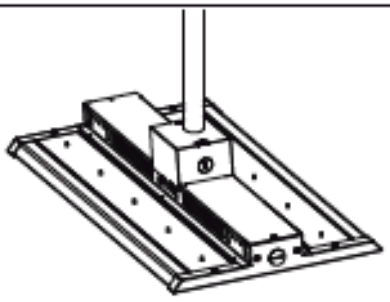

Applications

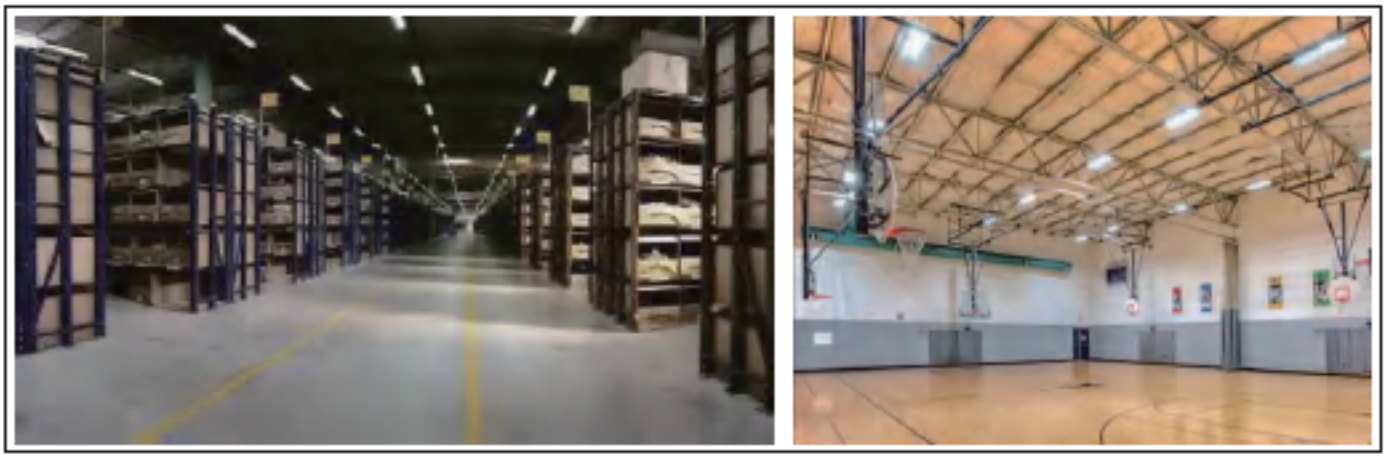

Packing /weight

Part No.	Outer box (L"W"H)	Qty/Ctn (pcs)	N.W/pcs (lbs/Kg)	G.W/Ctn (lbs/Kg)
KLL-TS-LHB5-220W	(26.0"*14.2"*12.6") (660*360*320mm)	4	7.1/3.2	32.6/14.8
KLL-TS-LHB5-300W	(49.6"*14.2"*7.35") (1260*360*190mm)	2	13.6/6.2	31.7/14.5

Note

1.The installation and maintenance must be completed by electricians or professionals.
2.Please cut off the power before installation and maintenance.
3.The thermally insulating material is not allowed to cover the fixture.
4.Please keep away from the corrosive substance, and keep the fixture dry and clean.
5.Working temperature: -40°F~113°F(-40°C~45°C), storage temperature: -40°F~158°F(-40°C~70°C).