Lamily Corp

LED Semi-Cutoff Wall Pack - WP09A

3-IN-1, Photocell ON/OFF, Wattage Adjustable & CCT selectable

Rev.11/30/24

Description

RZ's new LED semi-cutoff wall packs are your first choice for wall mounted lighting projects. 3 IN 1 switch is selectable for CCT, wattage, and photocell ON/OFF control. D2D photocell can automatically turn off at sunrise or during the day, and automatically light up at sunset or night. It is a highly efficient lighting solution that provides a long-lasting and energy-saving.

Application

- Factory
- Warehouse
- Walkways
- Hallways
- Outdoor Commercial
- Outdoor Residential

Certificate

- UL
- DLC

CERTIFIED | DLC QPL LISTED PREMIUM | 4WATTS SELECTABLE | 3CCT SELECTABLE | 3 in1 PHOTOCELL | Microwave | T4 | IP65 | 5 YEARS WARRANTY

LED Semi-Cutoff Wall Pack - WP09A

Key Features

- High efficacy up to 150 lm/W.
- 3CCT(3000/4000/5000K) and 4 wattages selectable offer SKU reduction.
- AC120-277V & AC120-347V for options.
- High UV resistance polycarbonate lens version provides uniform lighting distribution and large beam angle.
- The Borosilicate prismatic glass version provides a durable lifetime and good texture.
- ADC12 Aluminum die-casting housing provides excellent heat dissipation.
- Automated dusk-to-dawn photocell functionality.
- Reflector and wire guard accessories available.
- Microwave motion sensor and emergency driver available.
- Waterproof rated IP65.

Built-in photocell

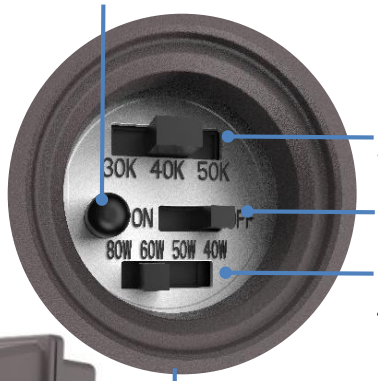

Field-adjustable CCT

3CCT Selectable: 3000K/4000K/5000K.

Photocell ON/OFF

Field-adjustable wattage

4 Wattage selectable.

Durable die-cast aluminum housing

1/2" Knockouts

Microwave motion sensor (Zhaga receptacle)

Two kinds of lens

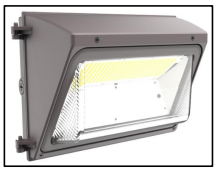

Glass

Polycarbonate

Wall pack with glare shield

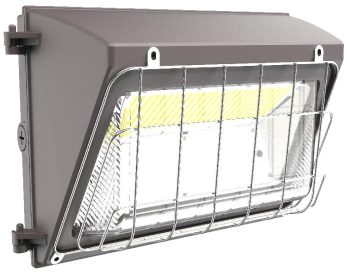

Wall pack with wire guard

LED Semi-Cutoff Wall Pack - WP09A

Performance Summary

Model NO. #	Size	Watts	3 CCT	LPW	Lumens(±10%)	Voltage	DIM	CRI	Beam Angle
WP09A-10-40Z-AD4C3-F	10"	15/20/30/40W Selectable	3CCT Selectable 3000K 4000K 5000K	150lm/W	6000LM@40W	AC120-277V AC120-347V	0-10V driver	>80	Type IV
WP09A-10-80Z-AD4C3-F	10"	40/50/60/80W Selectable			12000LM@80W				
WP09A-14-40Z-AD4C3-F	14"	15/20/30/40W Selectable			6000LM@40W				
WP09A-14-80Z-AD4C3-F	14"	40/50/60/80W Selectable			12000LM@80W				
WP09A-14-120Z-AD4C3-F	14"	60/90/100/120W Selectable			18000LM@120W				
WP09A-18-150Z-AD4C3-F	18"	80/100/120/150W Selectable			22500LM@150W				

*Remarks: 1. **All above efficacy and lumens are subject to CRI>80 @4000K, please check IES files for accurate data.***

2. WP09A-X-XXZ-AD4C3-F, X denotes size; Z denotes voltage, L=AC120-277V, M=AC120-347V; A denotes function, S2 = photocell, M2 = photocell and emergency driver, S = microwave motion sensor, M = microwave motion sensor and emergency driver; D4C3 denotes 0-10 V dimming driver, 4 wattage, and 3 CCT selectable; F denotes lens type, blank = glass lens, PC = polycarbonate lens.

3. CCT & Power Selectable models ship preset at the highest CCT and the highest wattage. Factory default settings for Photocell is ON.

Performance

- LED Type: SMD2835
- Frequency: 50/60HZ
- Power Factor: ≥0.90
- Operating Temp.:–40°F to 113°F (-40°C to +45°C)
- IP Rating: IP65
- THD: <20%
- Life Time: L70 @ 50,000Hrs
- Surge Protection: L/N 6KV, L/N-P 6KV
  L-N/L&N-PE:4+6KV(120-277V, 40W)

Construction

- Lens: Glass / Polycarbonate
- Housing: Die-cast aluminum
- Finish: Bronze, Custom finishes available

Mounting

- Wall Mount
- Five 1/2" knockouts: one on each side for convenient installation

Accessories (Sold separately)

Picture	Item#	Description
	ACC-WP09A-WG	Wire Guard
	ACC-WP09A-GS	Glare Shield

LED Semi-Cutoff Wall Pack - WP09A

	BLD-YM04S, 4W BLD-YM08S, 8W	Billda emergency driver, 4W for 10"&14" 40W fixture; 8W for 10" 80W fixture, 14" 80W&120W fixture
	BLD-CM15N, 15W	Billda emergency driver for 18" 150W fixture
	ANT-5-ZT	Sharkward microwave motion sensor
	ANT-5-ZT-BLE-GE	Sharkward bluetooth microwave motion sensor
	RC-100	Remote controller

Product Dimension

(unit: mm & inch)

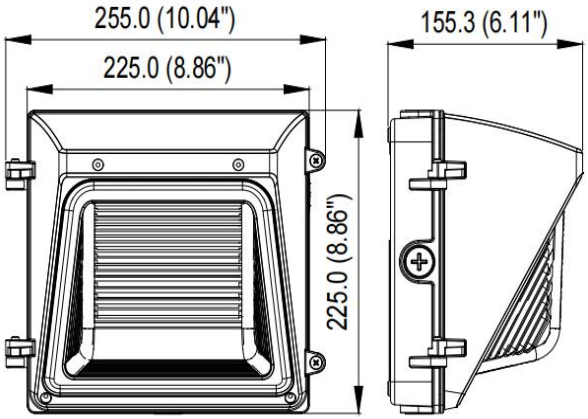

10"

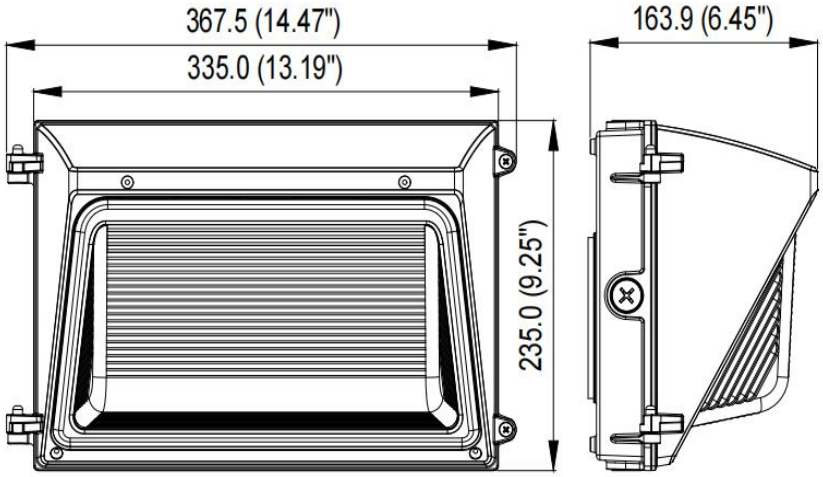

14"

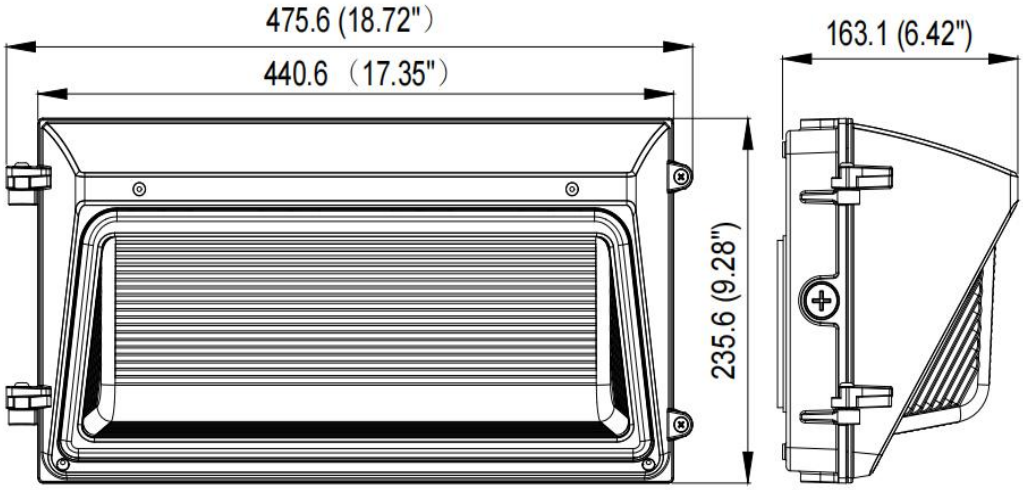

18"

LED Semi-Cutoff Wall Pack - WP09A

Packing Info.

Product Size (inch & mm)	N.W./PCS (KG)		G.W./CTN (KG)		Carton Size (inch & mm)	Q'ty/CTN (PCS)	20GP (PCS)	40HQ (PCS)
	Glass lens	PC lens	Glass lens	PC lens				
10" 10.04*8.86*6.11" 255.0*225.0*155.3mm	2.3	1.9	3.0	2.6	11.1×10.91×8.46" 282×277×215mm	1	1600	3696
14" 14.47*9.25*6.45" 367.5*235.0*163.0mm	3.3	2.7	4.1	3.5	15.79×11.3×8.66" 401×287×220mm	1	1110	2541
18" 18.72*9.28*6.42" 475.6*235.6*163.1mm	4.6	3.7	5.5	4.6	20.04×11.5×8.66" 509×292×220mm	1	850	1958