Lamily Corp

LED MINI WALL PACK - WP20

Photocell & CCT Selectable & Wattage Adjustable

Rev.4/30/24

Description

RZ's mini wall lights use the latest high-performance LED chips, which are high-brightness and low-energy consumption. They can be configured with automatic light-sensing functions that automatically turn off at sunrise or during the day, and automatically light up at sunset or at night, making them highly energy-efficient. The lamp body is composed of a die-cast aluminum ADC12 shell and a transparent lens, which is waterproof and will not seep water. A wide range of applications include stairwells, passageways and entryways in commercial and residential settings.

Application

- Security lighting
- Entryways
- Stairwells
- Hallways
- Outdoor commercial
- Outdoor residential

Certificate

- ETL

3CCT SELECTABLE

3Watts SELECTABLE

C ETL LISTED US Intertek

IP65

80% Energy Saving

LED MINI WALL PACK - WP20

Key Features

- Up to 130lm/W.
- 3 CCT and 3 Wattage Selectable.
- Automated Dusk to Dawn photocell functionality.
- ADC12 Aluminum Die Casting housing provides excellent heat dissipation.
- ETL/cETL/DLC Premium listed.
- Lifespan: >50,000Hrs.
- Wet location rated IP65.

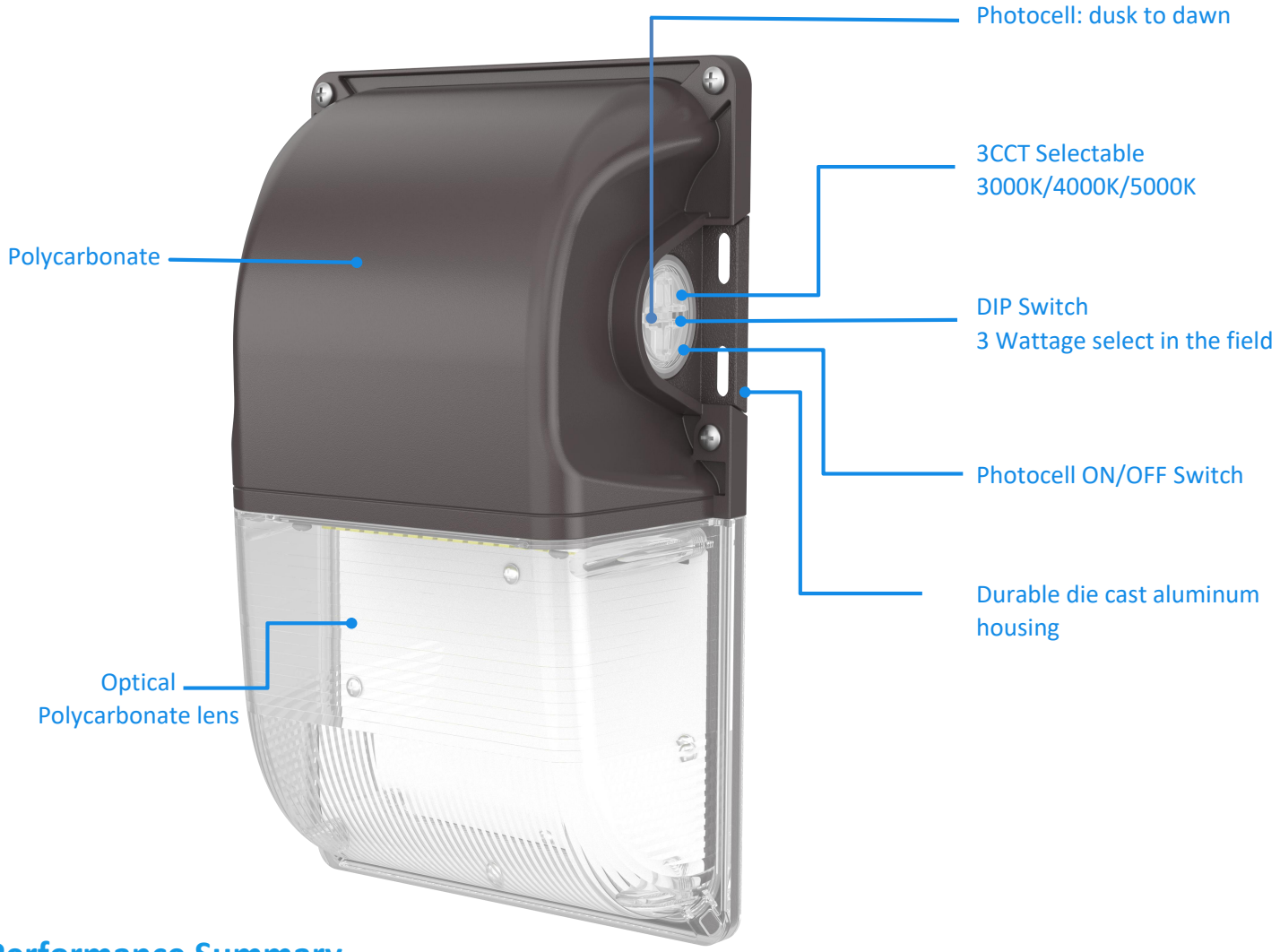

Performance Summary

Model NO. #	Size (mm)	Watts	CCT	LPW	Lumens(±10%)	Voltage	DIM	CRI	Beam Angle
WP20-15L-X-YY	230*150*72.8	15W or 15W/12W/8W Selected	Single CCT 3000K-6500K	140lm/W	2100 LM @ 15W	AC120-277V	0-10V	>80	100°
WP20-30L-X-YY	230*150*72.8	30W or 30W/20W/15W Selected	Single CCT 3000K-6500K	140lm/W	4200 LM @ 30W	AC120-277V	0-10V	>80	100°
WP20-30L-X-3CCT	230*150*72.8	30W/20W/15W Selected	3000/4000/5000K 3CCT Selected	130lm/W	3900 LM @ 30W	AC120-277V	0-10V	>80	100°

Remarks: All above efficacy and lumens are subject to 3000K, please check IES files for accurate data.

LED MINI WALL PACK - WP20

Performance

- LED Type: SMD2835
- Frequency: 50/60Hz
- Dimming: 0-10V
- Power Factor: ≥0.90
- IP Rating: IP65
- Life Time >50,000Hrs
- Operating Temp.: −22°F to 122°F (-30°C to +50°C)
- Surge Protection: L/N 2KV, L/N-P 2KV
- THD: <20%

Construction

- Lens: Polycarbonate
- Housing: ADC12 Aluminum Die Casting
- Finish: Bronze (Standard)

Mounting

- Wall Mount

Product Dimension

(unit: mm & inch)

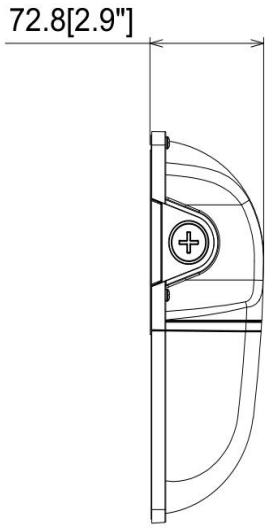

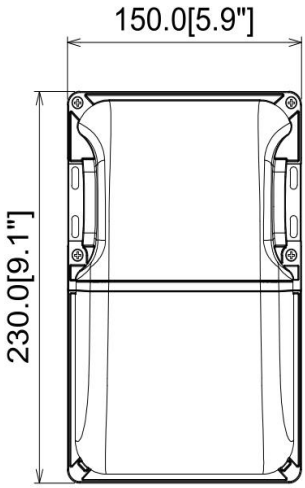

Packing Info.

Size	Product Weight (KG)		Package Weight (KG)		Carton Size (MM)	QTY/BOX (PCS)	QTY/CTN (PCS)	20GP (PCS)	40HQ (PCS)
	N.W/PC	G.W/PC	N.W/CTN	G.W/CTN					
WP20-15L-X-YY	0.65	0.75	7.80	9.00	510*350*300mm (20.08"*13.78"*11.81")	1	12	6264	15228
WP20-30L-X-YY	0.65	0.75	7.80	9.00	510*350*300mm (20.08"*13.78"*11.81")	1	12	6264	15228
WP20-30L-X-3CCT	0.67	0.77	8.10	9.30	510*350*300mm (20.08"*13.78"*11.81")	1	12	6264	15228