Lamily Corp

LED CANOPY LIGHT

15'' Sensor & CCT Selectable & Wattage Adjustable

Rev.12/13/23

Description

RZ's LED canopy lights are versatile and energy saving fixtures, which are ideal for parking garages, entryways, gas stations, outdoor aisles and many other commercial applications. It comes with color and wattage selectable, allowing you to customize the LED light output to best fit your project. Energy and maintenance savings up to 86% versus HID solutions, and can be easily surface mounted.

Application

- Covered Walkway
- Garages
- Warehouses
- Gas station
- Petroleum & Convenience Store

Certificate

- UL
- DLC

3CCT SELECTABLE

3Watts SELECTABLE

UL CERTIFIED

IP65

WARRANTY 5 YEARS

LED CANOPY LIGHT

Key Features

- Field-adjustable 3CCT & Wattages to reduce SKU's.
- Microwave motion sensor available.
- High efficiency up to 140LM/W.
- Perfect LED canopy lights to replace HID fixtures.
- Rugged die cast aluminum housing provides excellent heat dissipation.
- Wet location rated IP65.

Performance Summary

Model NO. #	Size (mm)	Watts	CCT	LPW	Lumens(±10%)	Voltage	CRI	Beam Angle
CP05-120L-X-YY	381*381*83mm	120W or 80W/100W/120W Wattage Selected	4000K-6500K Single CCT	140LM/W	16800LM @120W	AC120-277V	>80	120°
CP05-150L-X-YY	381*381*83mm	150W or 100W/120W/150W Wattage Selected	4000K-6500K Single CCT	140LM/W	21000LM @150W	AC120-277V	>80	120°
CP05-180L-X-YY	381*381*83mm	180W or 120W/150W/180W Wattage Selected	4000K-6500K Single CCT	140LM/W	25200LM @180W	AC120-277V	>80	120°
CP05-150L-X-3CCT	381*381*83mm	150W or 100W/120W/150W Wattage Selected	4000K/5000K/5700K 3CCT Selected	140LM/W	21000LM @150W	AC120-277V	>80	120°

Remarks: All above efficacy and lumens are subject to white finish @5000K.

LED CANOPY LIGHT

Performance

- LED Type: SMD2835
- Frequency: 50/60Hz
- Power Factor: ≥0.90
- IP Rating: IP65
- Life Time >50,000Hrs
- Operating Temp.: −40°F to 113°F (-40°C to +45°C)
- Surge Protection: L/N 6KV, L/N-P 6KV
- THD: <20%

Construction

- Lens: Polycarbonate
- Housing: ADC12 Aluminum Die Casting
- Finish: White

Mounting

- Surface Mount
- 3/4” Pipe Mount

Accessories

Microwave Motion Sensor apply to Zhaga Socket (DC12V, Haisen Brand)

Microwave Motion Sensor apply to Zhaga Socket (DC12V, Sharkward Brand)

Product Dimension

(unit: mm & inch)

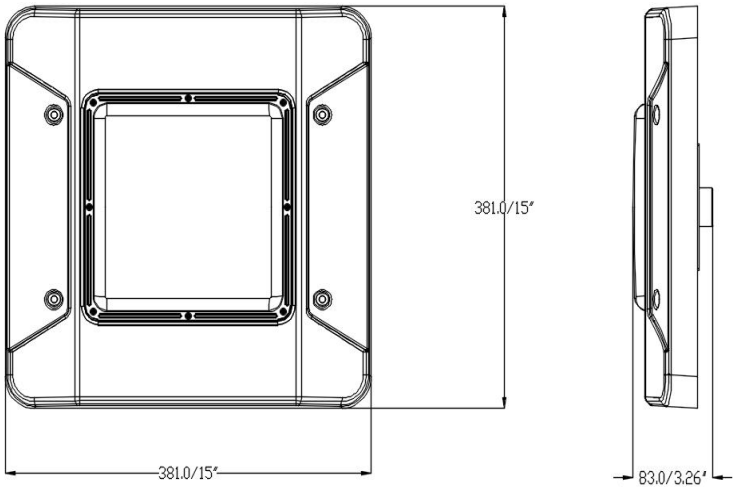

Packing Info.

Size	Product Weight (KG)	Package Weight (KG)	Carton Size (MM)	QTY/CTN (PCS)	20GP (PCS)	40GP (PCS)	40HQ (PCS)
	N.W./PC	G.W./CTN					
381*381*83mm	4.5	5.5	455*455*130mm	1	1040	2006	2526