ODVDN 10

INPUT-i

	x_1	x_2
R	0	0
S	0	1
U	1	0
D	1	1

STANJA

	g_1	g_2
S_0	0	0
S_1	0	1
S_2	1	0
S_3	1	1

OUTPUT-i

	y_1	y_2
0	0	0
1	0	1
2	1	0
3	1	1

	0 S_0	1 S_1	2 S_2	3 S_3
R	S_0	S_0	S_0	S_0
S	S_0	S_1	S_2	S_3
U	S_1	S_2	S_3	S_0
D	S_3	S_0	S_1	S_2

g	Dg	R	S
0	0	x	0
0	1	0	1
1	0	1	0
1	1	0	x

INPUT x_1	x_2	STANJE g_1	g_2	NOVO STANJE $D'g_1$	$D'g_2$	OUTPUT y_1	y_2	CELICA 1 r_1	s_1	CELICA 2 r_2	s_2
0	0	0	0	0	0	0	0	x	0	x	0
0	0	0	1	0	0	0	0	x	0	1	0
0	0	1	0	0	0	0	0	1	0	x	0
0	0	1	1	0	0	0	0	1	0	1	0
0	1	0	0	0	0	0	0	x	0	x	0
0	1	0	1	0	1	0	1	x	0	0	x
0	1	1	0	1	0	1	0	0	x	x	0
0	1	1	1	1	1	1	1	0	x	0	x
1	0	0	0	0	1	0	1	x	0	0	1
1	0	0	1	1	0	1	0	0	1	1	0
1	0	1	0	1	1	1	1	0	x	0	1
1	0	1	1	0	0	0	0	1	0	1	0
1	1	0	0	1	1	1	1	0	1	0	1
1	1	0	1	0	0	0	0	x	0	1	0
1	1	1	0	0	1	0	1	1	0	0	1
1	1	1	1	1	0	1	0	0	x	1	0

R_1

$x_2 \backslash x_1$			
0	1	0	X
X	0	0	X
0	1	1	X
X	0	1	X

g_2 g_1

S_1

$x_2 \backslash x_1$			
1	0	X	0
0	X	X	0
1	0	0	0
0	X	0	0

g_2 g_1

R_1: $\overline{x_1}\,\overline{x_2} \vee \overline{x_2}\, g_1 g_2 \vee x_1 x_2 g_1 \overline{g_2}$

S_1: $x_1 x_2 \overline{g_1}\,\overline{g_2} \vee x_1 \overline{x_2}\,\overline{g_1} g_2$

R_2

$x_2 \backslash x_1$			
0	0	X	X
1	1	0	0
1	1	1	1
0	0	X	X

g_2 g_1

S_2

$x_2 \backslash x_1$			
1	1	0	0
0	0	X	X
0	0	0	0
1	1	0	0

g_2 g_1

R_2: $x_1 g_2 \vee \overline{x_1}\,\overline{x_2}$

S_2: $x_1 \overline{g_2}$

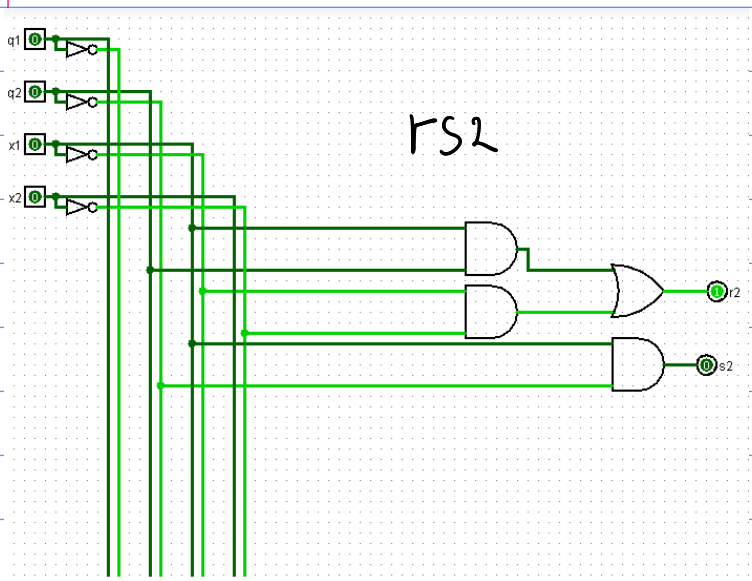
q1
q2
x1
x2
RS2
r2
s2

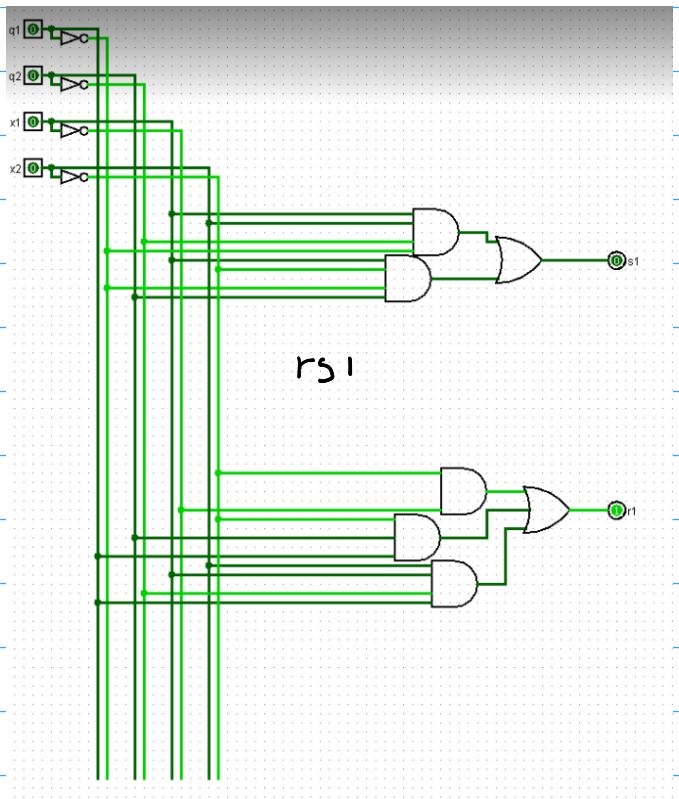
q1
q2
x1
x2
s1
RS1
r1

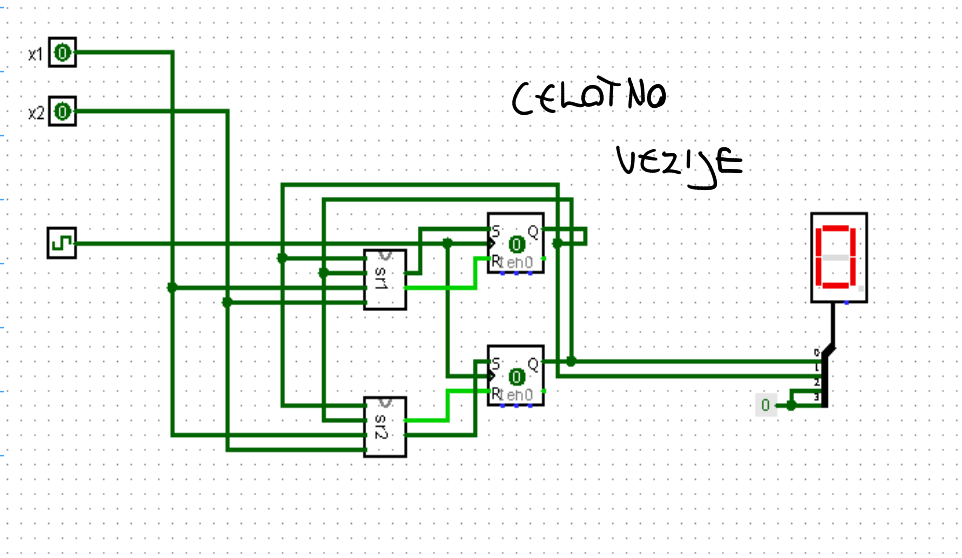
x1
x2
CELOTNO
VEZIJE
sr1
sr2
S
Q
R
en
0