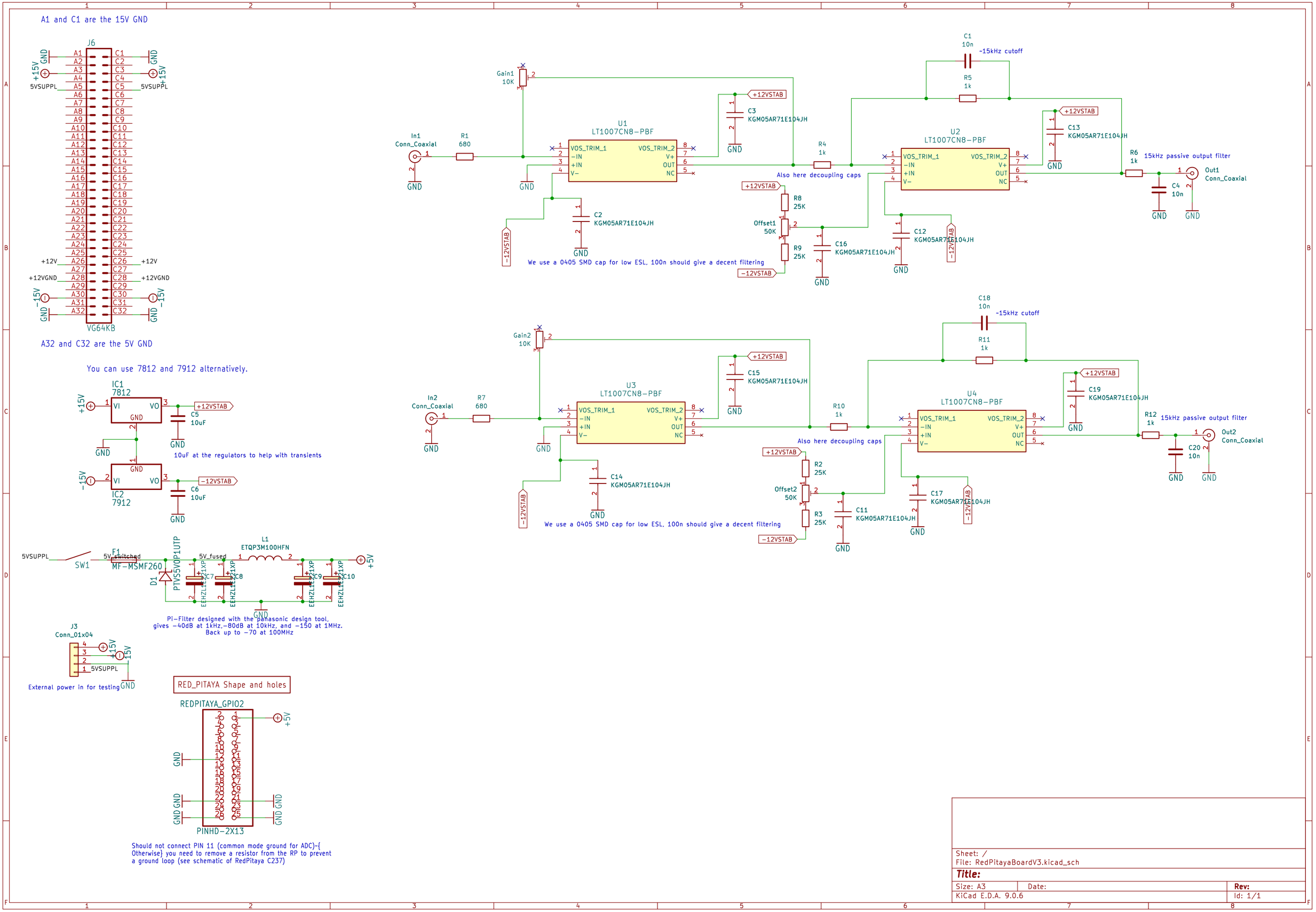
A1 and C1 are the 15V GND
J6
VG64KB
A32 and C32 are the 5V GND
You can use 7812 and 7912 alternatively.
IC1
7812
IC2
7912
C5
10uF
C6
10uF
10uF at the regulators to help with transients
SW1
F1
MF-MSMF260
D1
PTVS5V0P1UTP
L1
ETQP3M100HFN
Pi-Filter designed with the panasonic design tool,
gives -40dB at 1kHz,-80dB at 10kHz, and -150 at 1MHz.
Back up to -70 at 100MHz
J3
Conn_01x04
External power in for testing
RED_PITAYA Shape and holes
REDPITAYA_GPIO2
PINHD-2X13
Should not connect PIN 11 (common mode ground for ADC)-{
Otherwise} you need to remove a resistor from the RP to prevent
a ground loop (see schematic of RedPitaya C237)
Gain1
10K
In1
Conn_Coaxial
R1
680
U1
LT1007CN8-PBF
C3
KGM05AR71E104JH
C2
KGM05AR71E104JH
We use a 0405 SMD cap for low ESL, 100n should give a decent filtering
C1
10n
~15kHz cutoff
R5
1k
R4
1k
Also here decoupling caps
R8
25K
Offset1
50K
R9
25K
C16
KGM05AR71E104JH
U2
LT1007CN8-PBF
C13
KGM05AR71E104JH
C12
KGM05AR71E104JH
R6
1k
15kHz passive output filter
C4
10n
Out1
Conn_Coaxial
Gain2
10K
In2
Conn_Coaxial
R7
680
U3
LT1007CN8-PBF
C15
KGM05AR71E104JH
C14
KGM05AR71E104JH
We use a 0405 SMD cap for low ESL, 100n should give a decent filtering
C18
10n
~15kHz cutoff
R11
1k
R10
1k
Also here decoupling caps
R2
25K
Offset2
50K
R3
25K
C11
KGM05AR71E104JH
U4
LT1007CN8-PBF
C19
KGM05AR71E104JH
C17
KGM05AR71E104JH
R12
1k
15kHz passive output filter
C20
10n
Out2
Conn_Coaxial
Sheet: /
File: RedPitayaBoardV3.kicad_sch
Title:
Size: A3
Date:
Rev:
KiCad E.D.A. 9.0.6
Id: 1/1