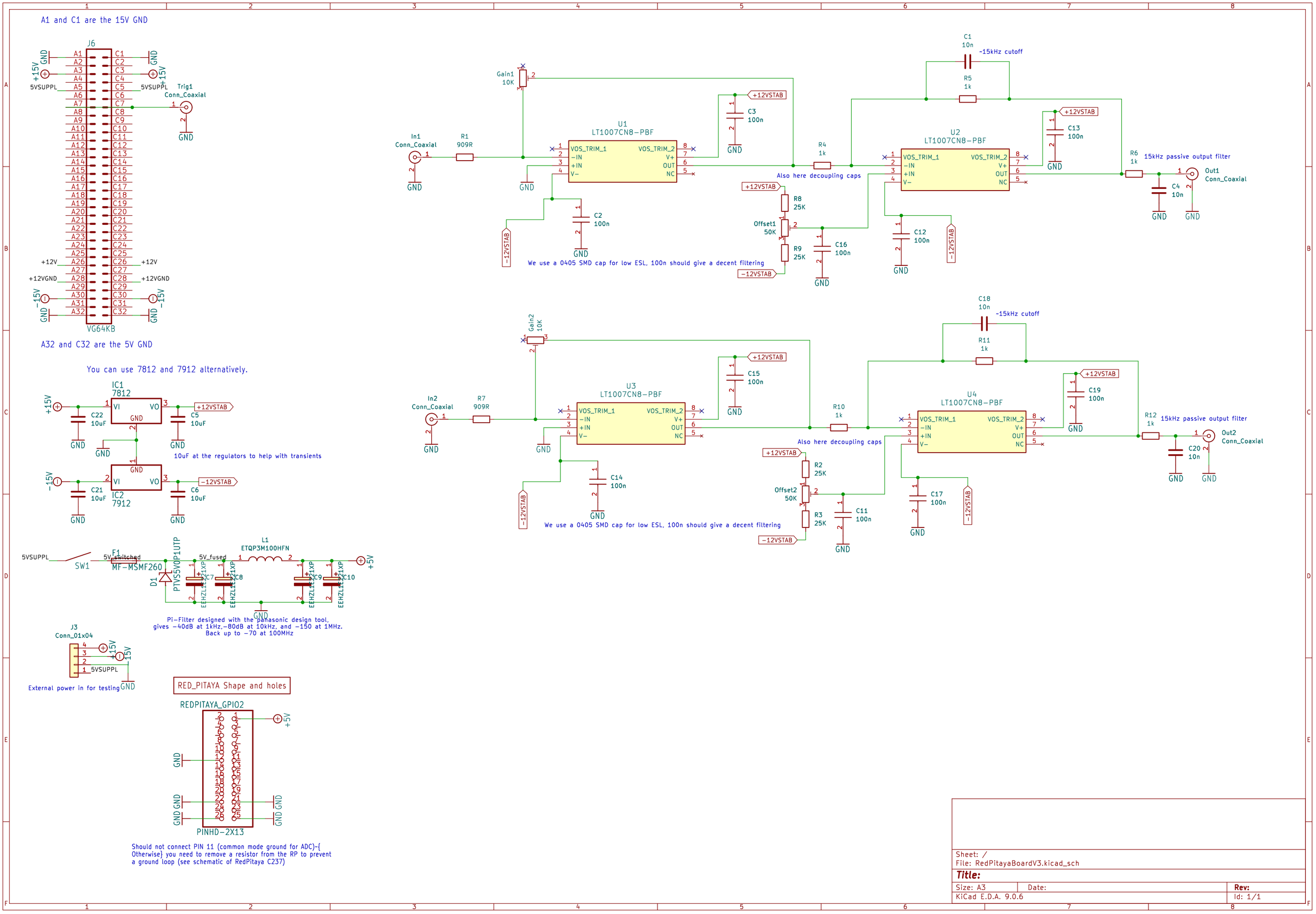
A1 and C1 are the 15V GND
J6
VG64KB
5VSUPPL
Trig1
Conn_Coaxial
+12V
+12VGND
A32 and C32 are the 5V GND
You can use 7812 and 7912 alternatively.
IC1
7812
IC2
7912
C22 10uF
C5 10uF
C21 10uF
C6 10uF
+12VSTAB
−12VSTAB
10uF at the regulators to help with transients
SW1
F1
MF-MSMF260
D1
PTVS5V0P1UTP
5V_switched
5V_fused
L1
ETQP3M100HFN
C7
C8
C9
C10
Pi-Filter designed with the panasonic design tool,
gives −40dB at 1kHz,−80dB at 10kHz, and −150 at 1MHz.
Back up to −70 at 100MHz
J3
Conn_01x04
External power in for testing
RED_PITAYA Shape and holes
REDPITAYA_GPIO2
PINHD-2X13
Should not connect PIN 11 (common mode ground for ADC)-{
Otherwise} you need to remove a resistor from the RP to prevent
a ground loop (see schematic of RedPitaya C237)
Gain1
10K
In1
Conn_coaxial
R1
909R
U1
LT1007CN8-PBF
VOS_TRIM_1
−IN
+IN
V−
VOS_TRIM_2
V+
OUT
NC
C3
100n
C2
100n
R4
1k
Also here decoupling caps
R8
25K
Offset1
50K
R9
25K
C16
100n
We use a 0405 SMD cap for low ESL, 100n should give a decent filtering
C1
10n
~15kHz cutoff
R5
1k
U2
LT1007CN8-PBF
C13
100n
C12
100n
R6
1k
15kHz passive output filter
C4
10n
Out1
Conn_Coaxial
Gain2
10K
In2
Conn_Coaxial
R7
909R
U3
LT1007CN8-PBF
C15
100n
C14
100n
R10
1k
Also here decoupling caps
R2
25K
Offset2
50K
R3
25K
C11
100n
We use a 0405 SMD cap for low ESL, 100n should give a decent filtering
C18
10n
~15kHz cutoff
R11
1k
U4
LT1007CN8-PBF
C19
100n
C17
100n
R12
1k
15kHz passive output filter
C20
10n
Out2
Conn_Coaxial
Sheet: /
File: RedPitayaBoardV3.kicad_sch
Title:
Size: A3
Date:
Rev:
KiCad E.D.A. 9.0.6
Id: 1/1