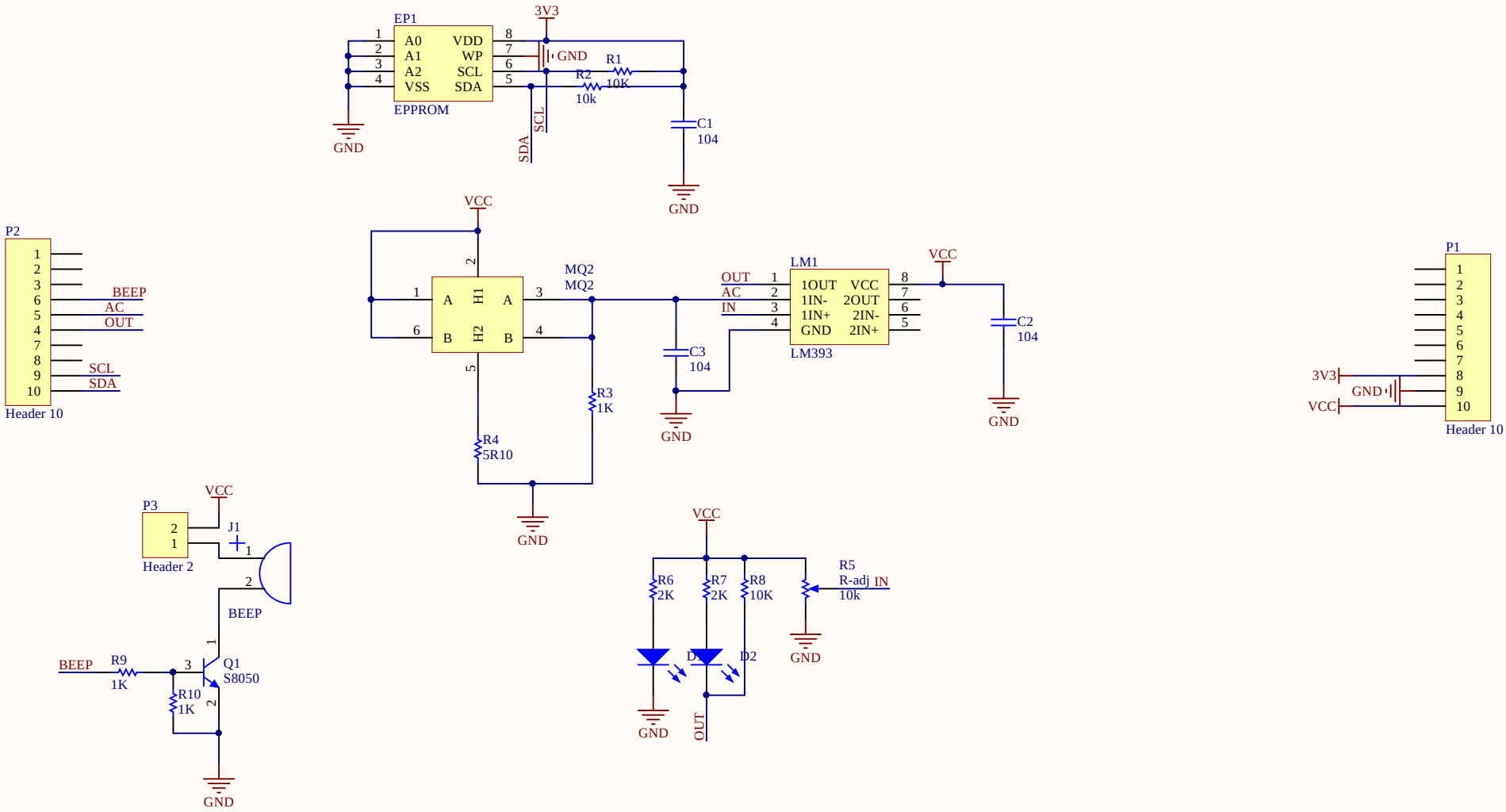

Title		
Size A4	Number	Revision
Date: 2018/4/17		Sheet of
File: E:\Altium画\扩展板烟感.SchDoc		Drawn By:

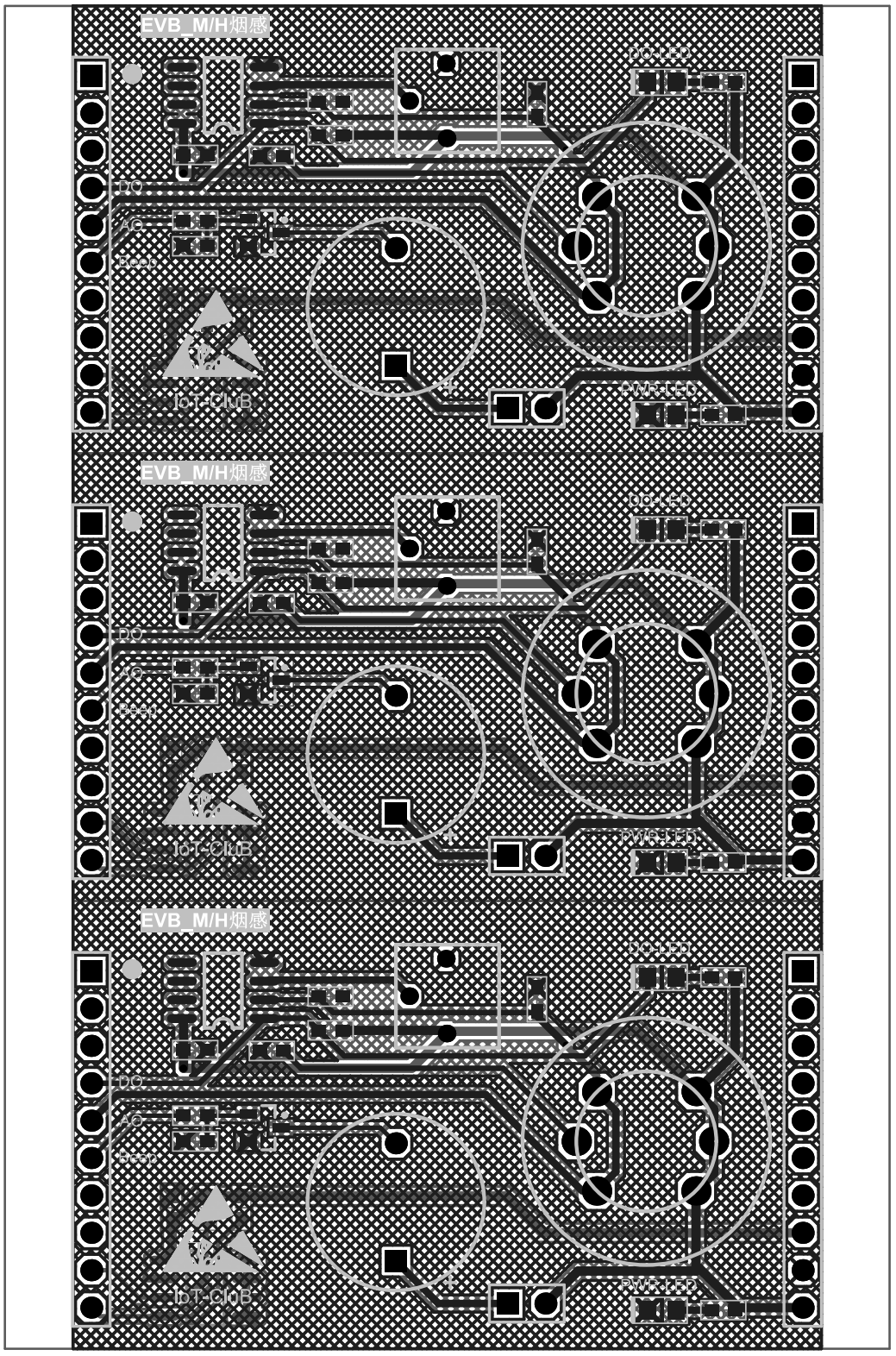
EVB_M/H烟感
DO-LED
DO
AO
Beep
IoT-CIuB
PWR-LED
EVB_M/H烟感
DO-LED
DO
AO
Beep
IoT-CIuB
PWR-LED
EVB_M/H烟感
DO-LED
DO
AO
Beep
IoT-CIuB
PWR-LED

Board St