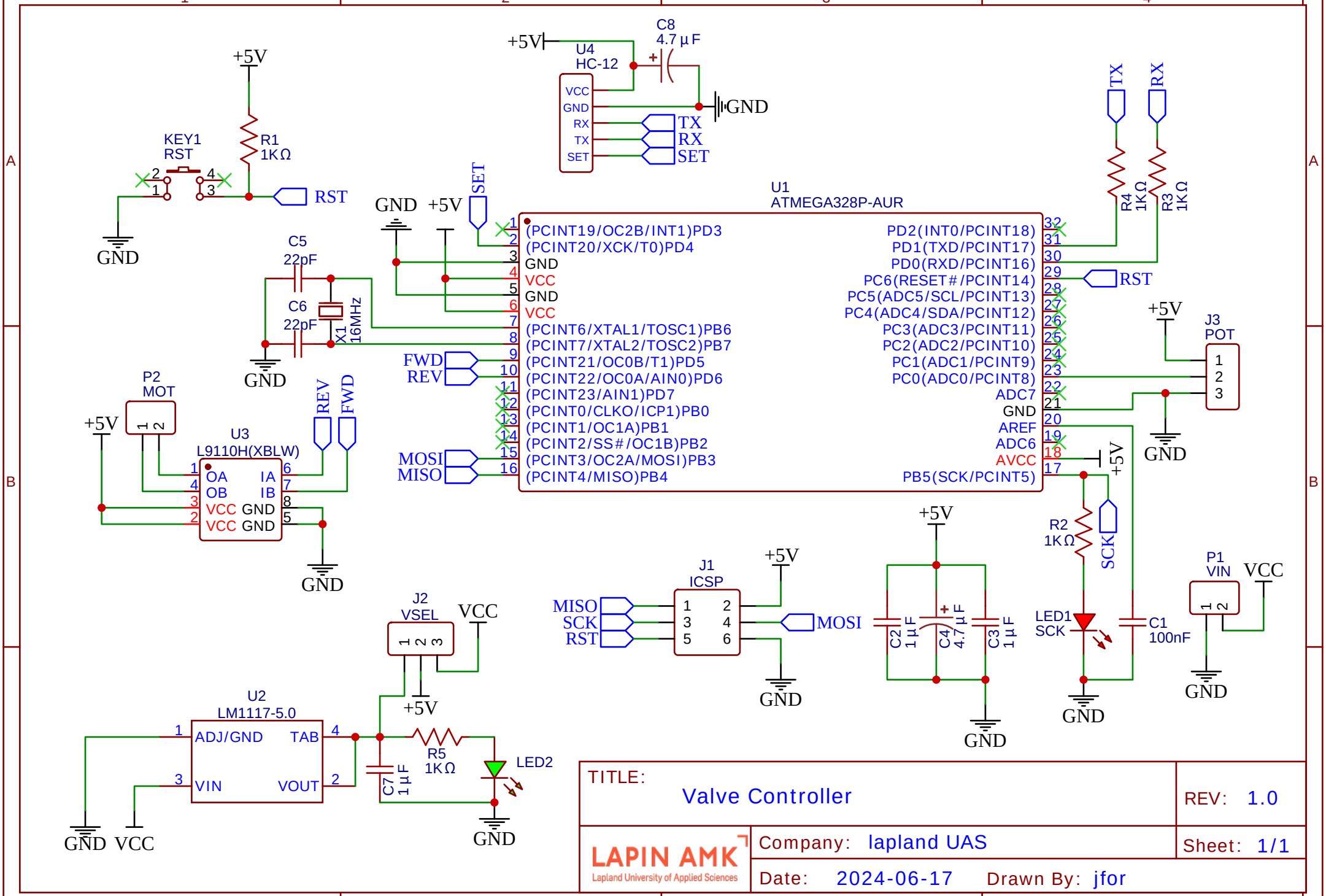

TITLE: Valve Controller

REV: 1.0

Company: lapland UAS

Sheet: 1/1

Date: 2024-06-17

Drawn By: jfor

LAPIN AMK
Lapland University of Applied Sciences