BLOCK_A_POWER

File: power.kicad_sch

BLOCK_B_MIC_INPUT

File: mic_input.kicad_sch

BLOCK_D_DSP

File: DSP_main.kicad_sch

BLOCK_C_BT

File: bluetooth.kicad_sch

Sheet: /
File: FOX_M4_Prototype_v1.0.kicad_sch

Title:

Size: A4	Date:	**Rev:**
KiCad E.D.A. 10.0.1		Id: 1/5

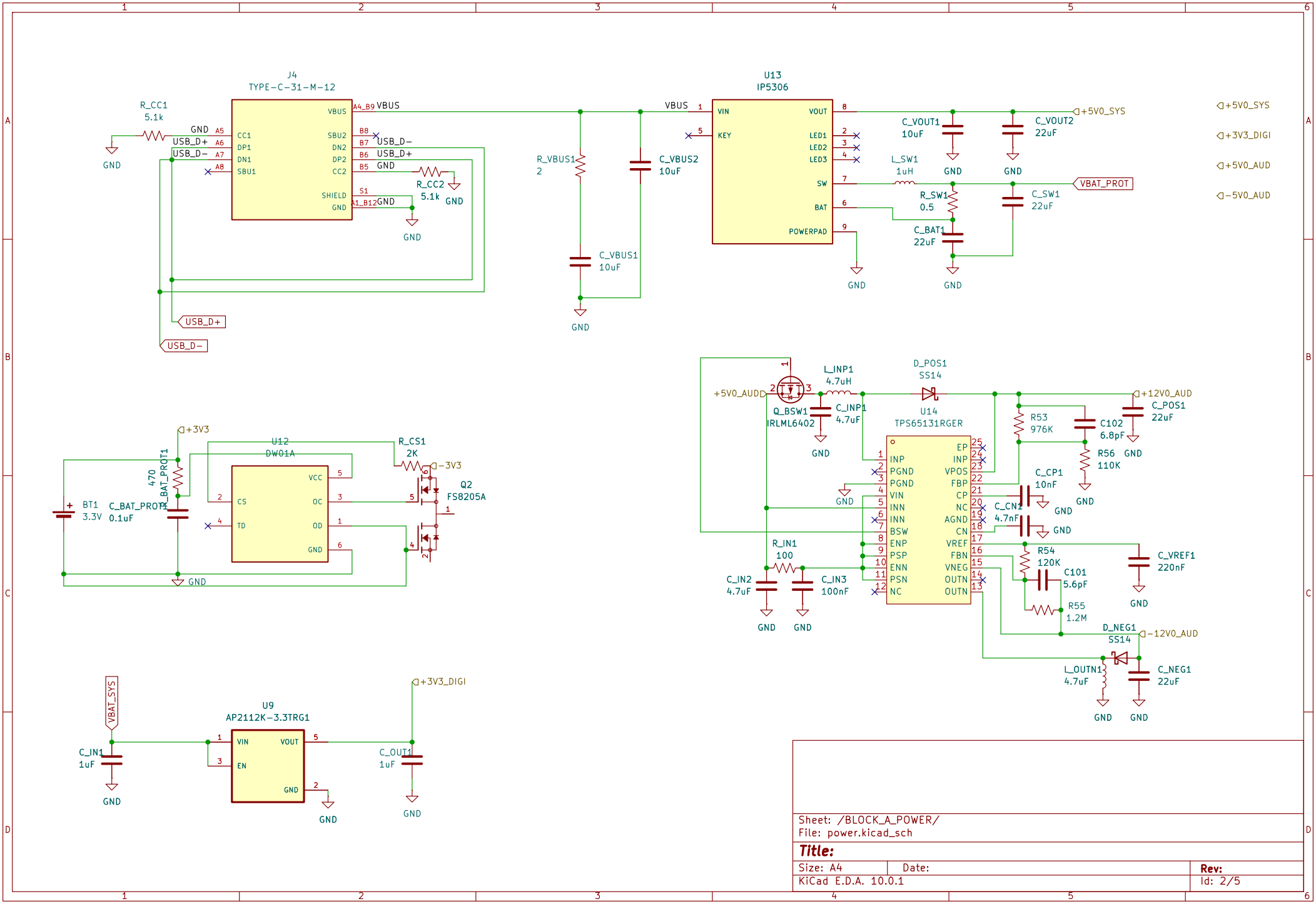

Sheet: /BLOCK_A_POWER/
File: power.kicad_sch

Title:

Size: A4	Date:	Rev:
KiCad E.D.A. 10.0.1		Id: 2/5

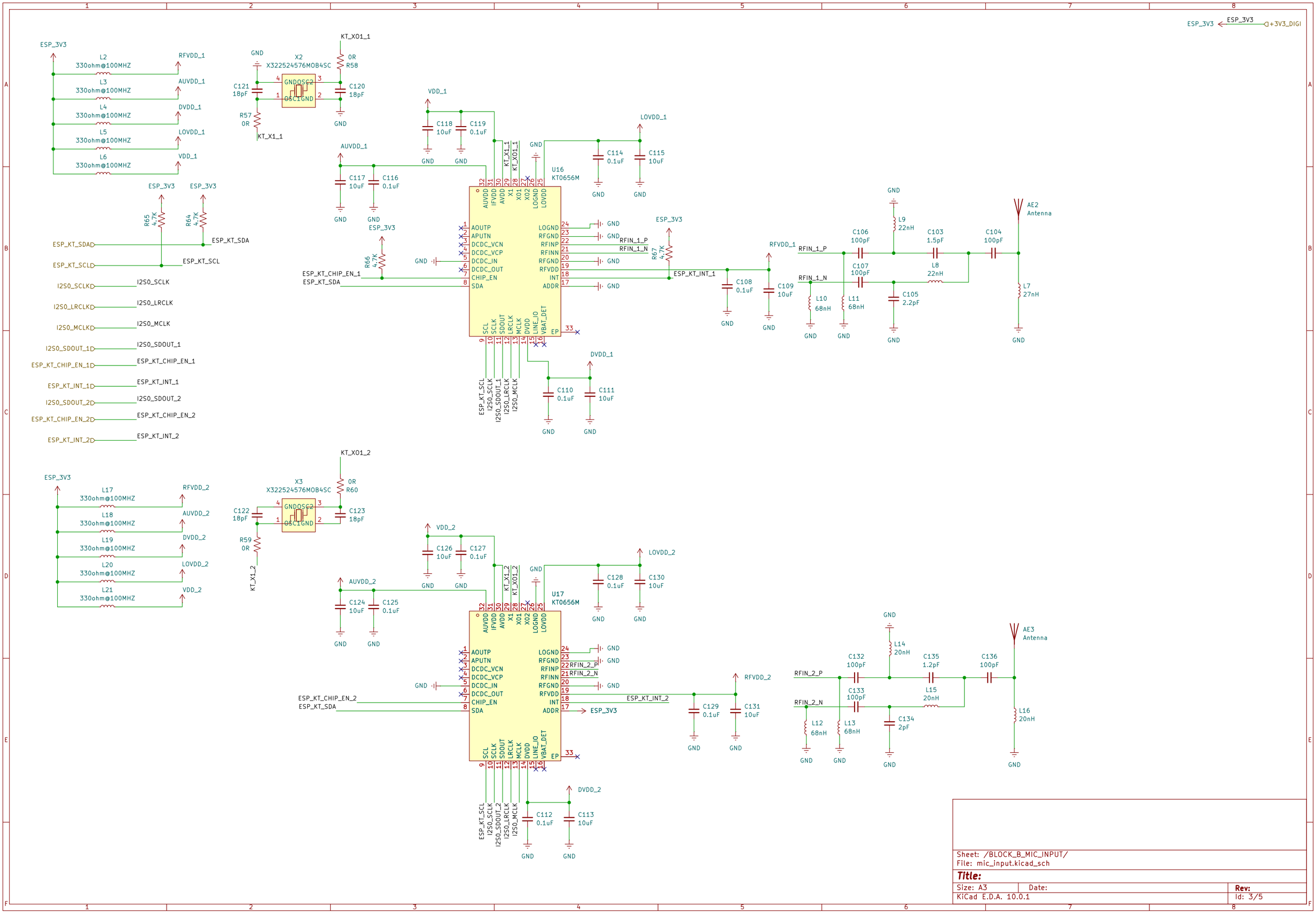
ESP_3V3
ESP_3V3
+3V3_DIGI
L2 330ohm@100MHZ
L3 330ohm@100MHZ
L4 330ohm@100MHZ
L5 330ohm@100MHZ
L6 330ohm@100MHZ
RFVDD_1
AUVDD_1
DVDD_1
LOVDD_1
VDD_1
X2 X322524576MOB4SC
KT_XO1_1
0R R58
C121 18pF
C120 18pF
R57 0R
KT_X1_1
C118 10uF
C119 0.1uF
C117 10uF
C116 0.1uF
C114 0.1uF
C115 10uF
U16 KT0656M
R65 4.7K
R64 4.7K
ESP_KT_SDA
ESP_KT_SCL
I2S0_SCLK
I2S0_LRCLK
I2S0_MCLK
I2S0_SDOUT_1
ESP_KT_CHIP_EN_1
ESP_KT_INT_1
I2S0_SDOUT_2
ESP_KT_CHIP_EN_2
ESP_KT_INT_2
R66 4.7K
ESP_KT_CHIP_EN_1
R67 4.7K
ESP_KT_INT_1
RFIN_1_P
RFIN_1_N
C108 0.1uF
C109 10uF
C110 0.1uF
C111 10uF
DVDD_1
C106 100pF
C107 100pF
L9 22nH
L10 68nH
L11 68nH
C105 2.2pF
C103 1.5pF
L8 22nH
C104 100pF
AE2 Antenna
L7 27nH
L17 330ohm@100MHZ
L18 330ohm@100MHZ
L19 330ohm@100MHZ
L20 330ohm@100MHZ
L21 330ohm@100MHZ
RFVDD_2
AUVDD_2
DVDD_2
LOVDD_2
VDD_2
X3 X322524576MOB4SC
KT_XO1_2
0R R60
C122 18pF
C123 18pF
R59 0R
KT_X1_2
C126 10uF
C127 0.1uF
C124 10uF
C125 0.1uF
C128 0.1uF
C130 10uF
U17 KT0656M
ESP_KT_CHIP_EN_2
ESP_KT_SDA
ESP_KT_INT_2
RFIN_2_P
RFIN_2_N
C129 0.1uF
C131 10uF
C112 0.1uF
C113 10uF
C132 100pF
C133 100pF
L14 20nH
L12 68nH
L13 68nH
C134 2pF
C135 1.2pF
L15 20nH
C136 100pF
AE3 Antenna
L16 20nH
Sheet: /BLOCK_B_MIC_INPUT/
File: mic_input.kicad_sch
Title:
Size: A3
Date:
Rev:
KiCad E.D.A. 10.0.1
Id: 3/5

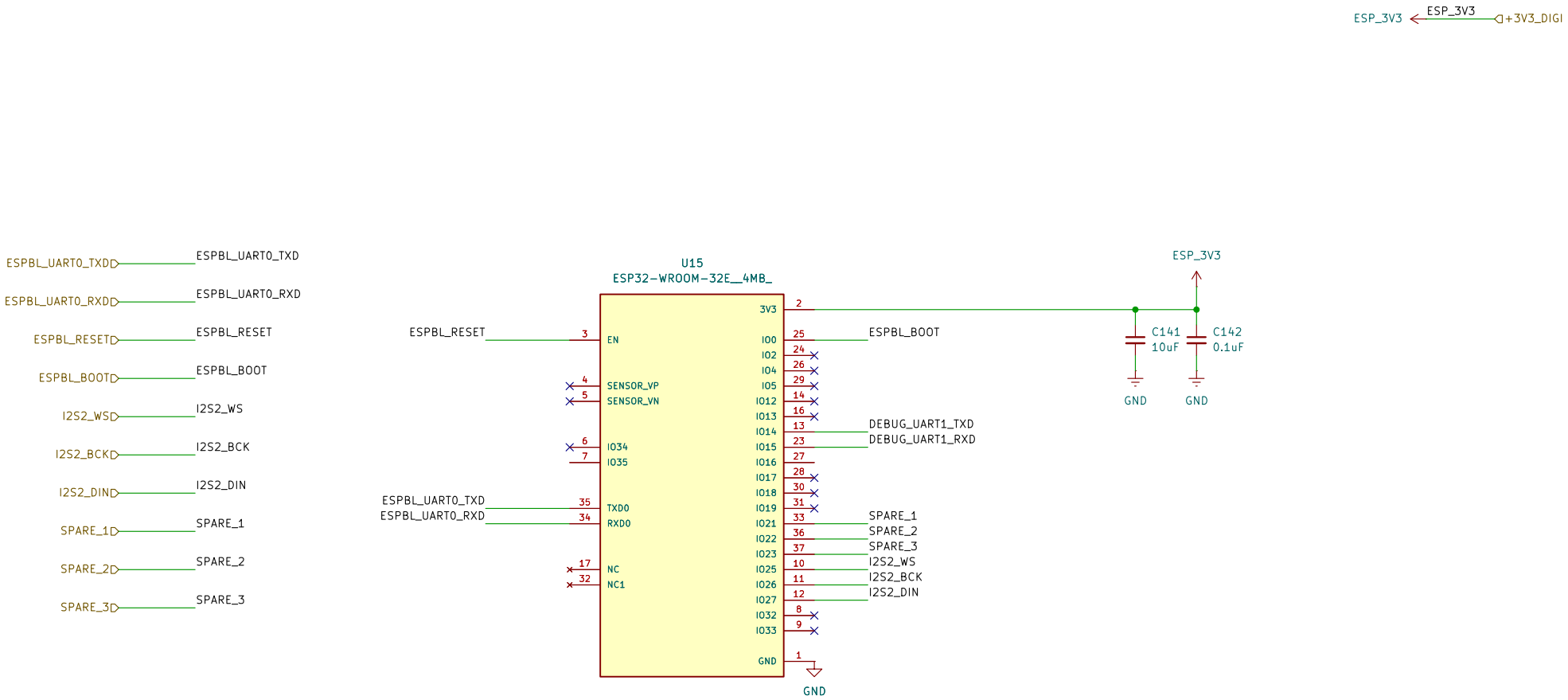

Sheet: /BLOCK_C_BT/
File: bluetooth.kicad_sch

Title:

Size: A4	Date:	**Rev:**
KiCad E.D.A. 10.0.1		Id: 4/5

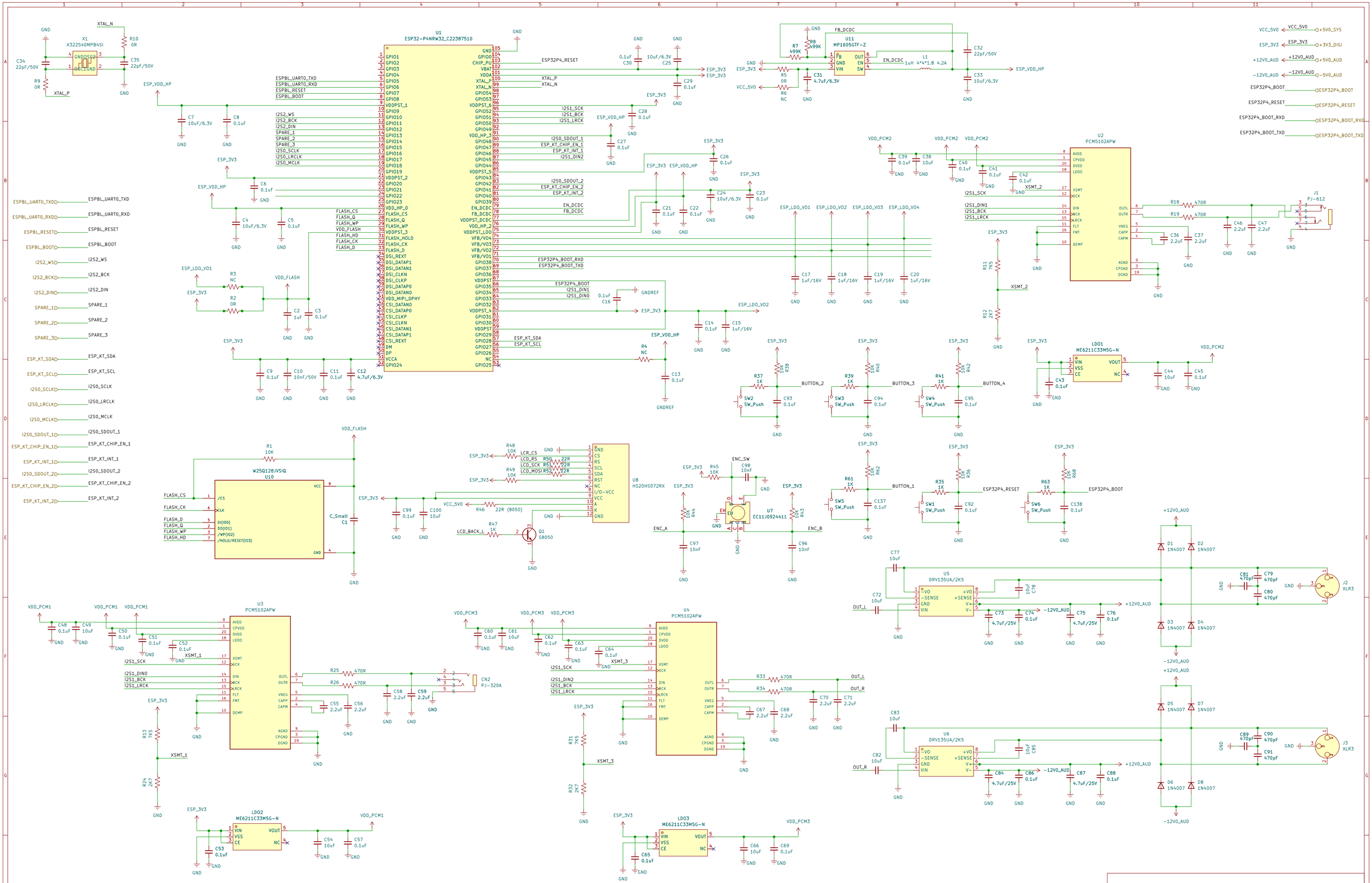

Sheet: /BLOCK_D_DSP/
File: DSP_main.kicad_sch

Title:

Size: A2	Date:	Rev:
KiCad E.D.A. 10.0.1		Id: 5/5