BLOCK_A_POWER

File: power.kicad_sch

BLOCK_B_MIC_INPUT

File: mic_input.kicad_sch

BLOCK_D_DSP

File: DSP_main.kicad_sch

BLOCK_C_BT

File: bluetooth.kicad_sch

Sheet: /
File: FOX_M4_Prototype_v1.0.kicad_sch

Title:

Size: A4	Date:	**Rev:**
KiCad E.D.A. 10.0.1		Id: 1/5

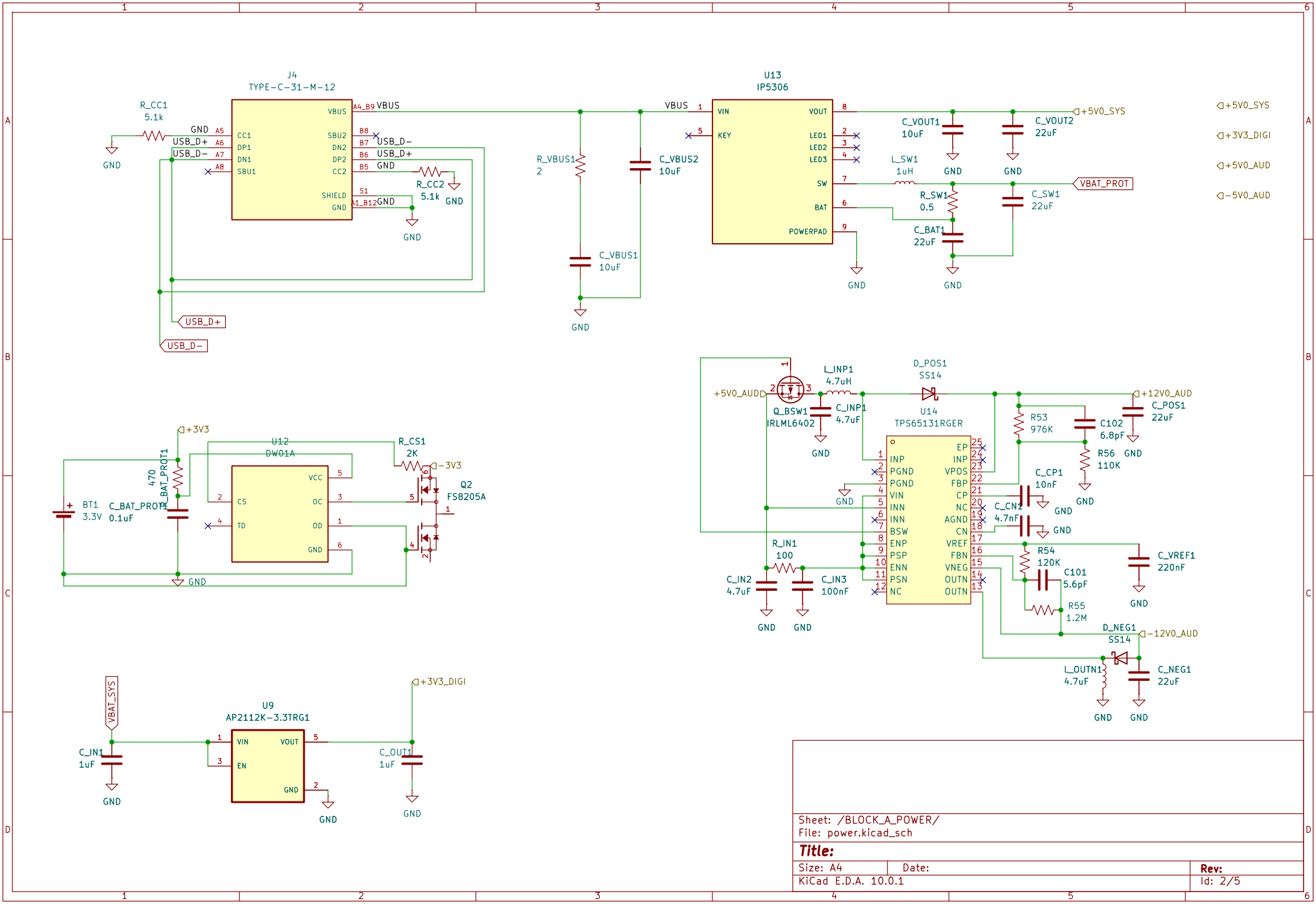

Sheet: /BLOCK_A_POWER/
File: power.kicad_sch

Title:

Size: A4	Date:	Rev:
KiCad E.D.A. 10.0.1		Id: 2/5

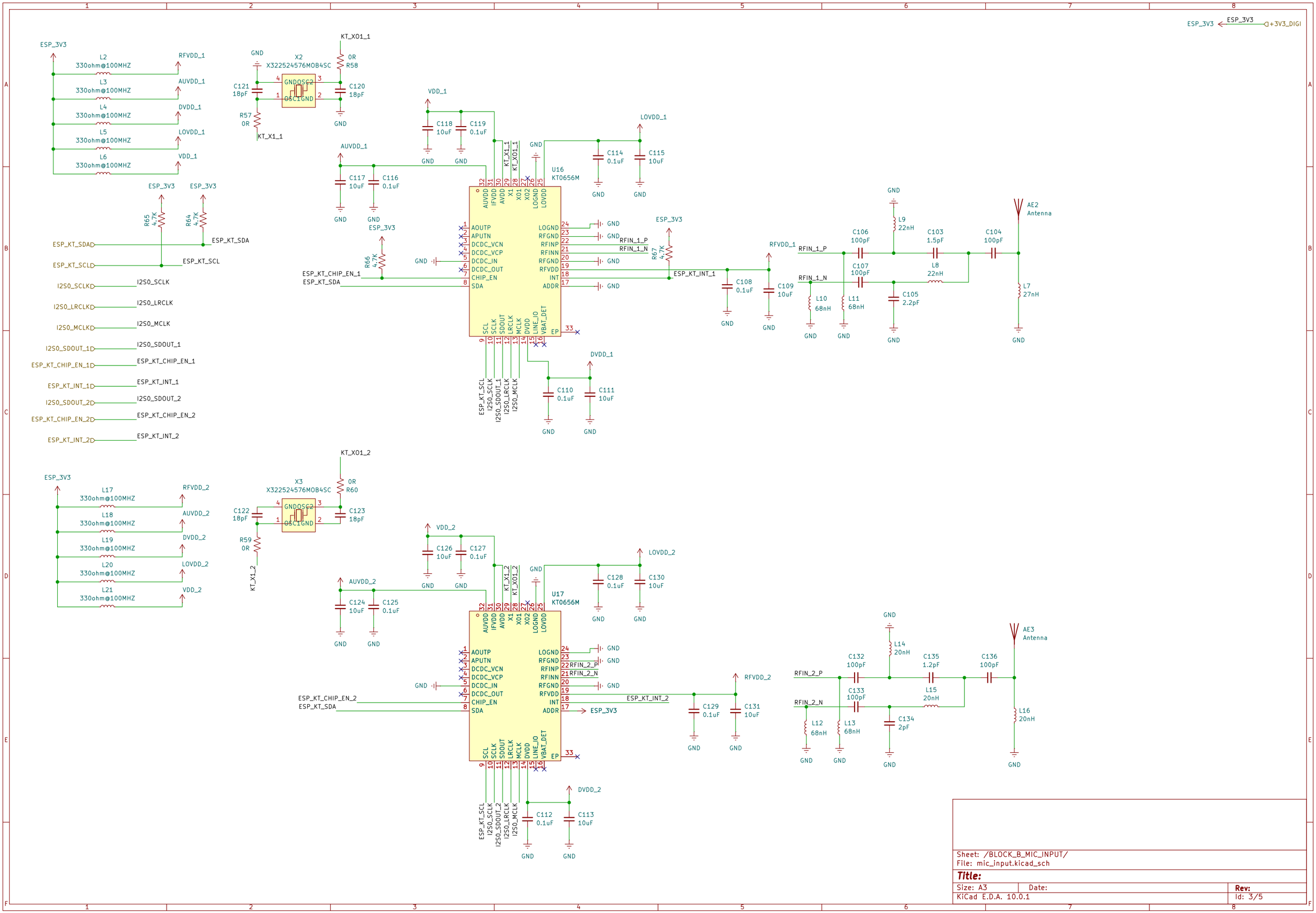

Sheet: /BLOCK_B_MIC_INPUT/
File: mic_input.kicad_sch

Title:

Size: A3	Date:	Rev:
KiCad E.D.A. 10.0.1		Id: 3/5

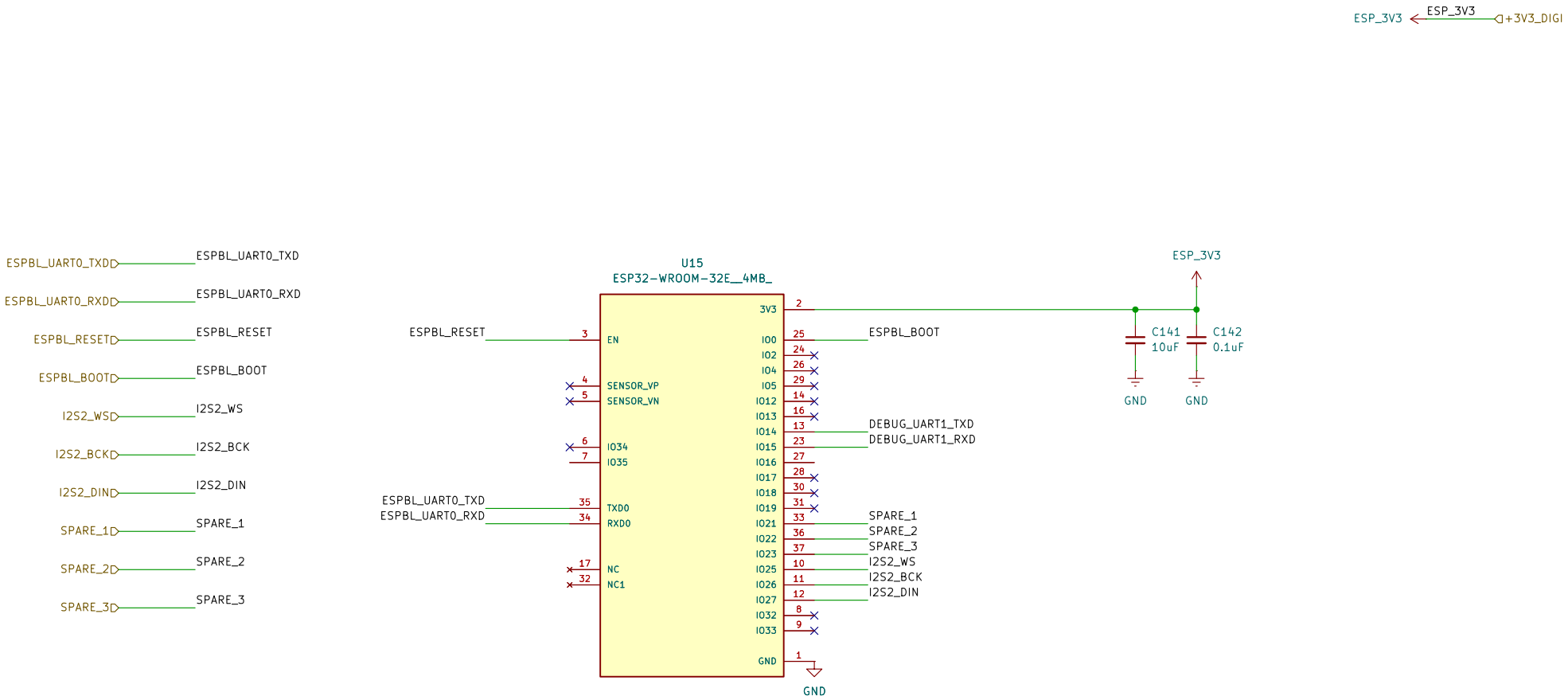

Sheet: /BLOCK_C_BT/
File: bluetooth.kicad_sch

Title:

Size: A4	Date:	**Rev:**
KiCad E.D.A. 10.0.1		Id: 4/5

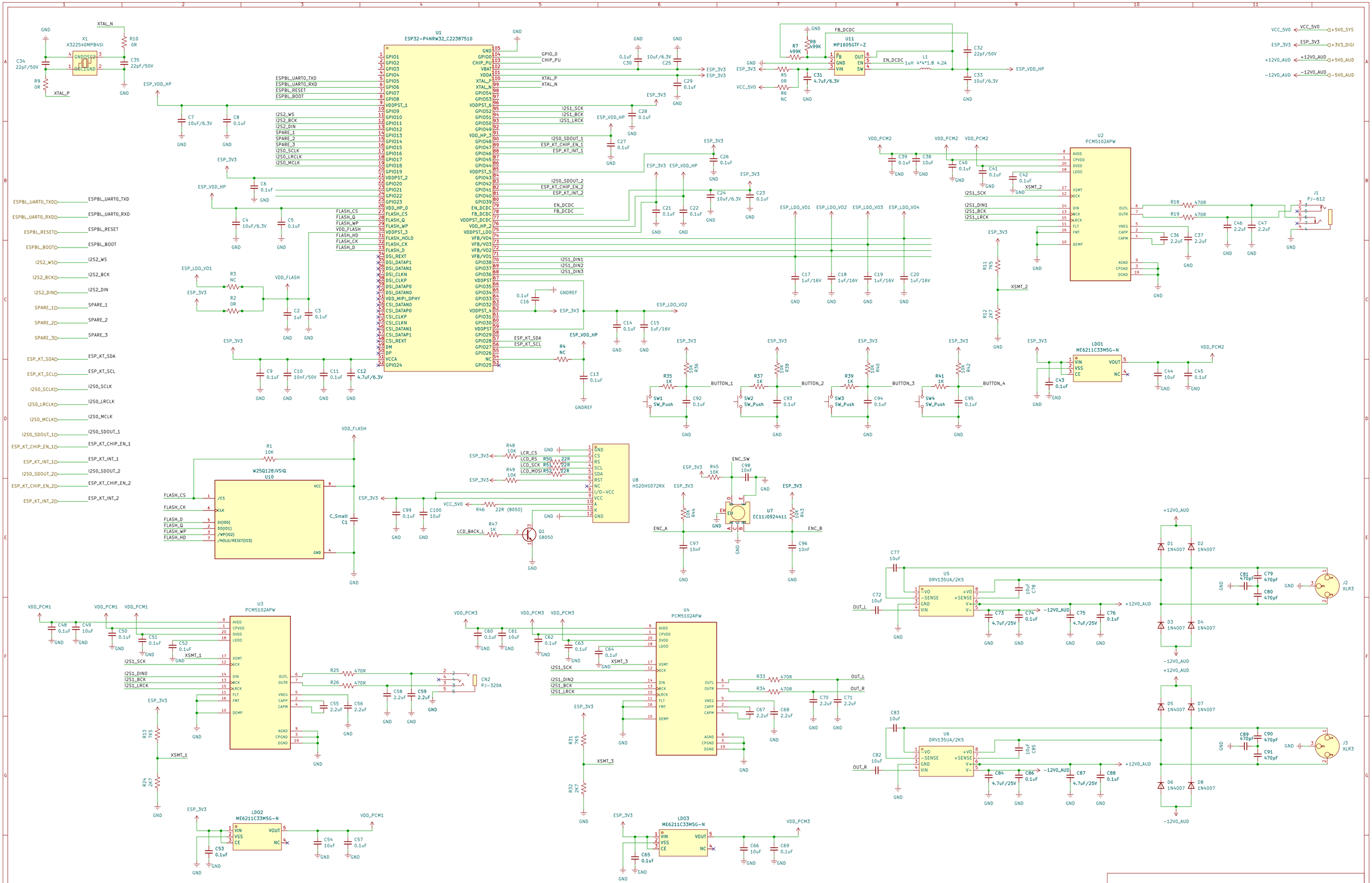

Sheet: /BLOCK_D_DSP/
File: DSP_main.kicad_sch

Title:

Size: A2 | Date: | Rev:
KiCad E.D.A. 10.0.1 | Id: 5/5