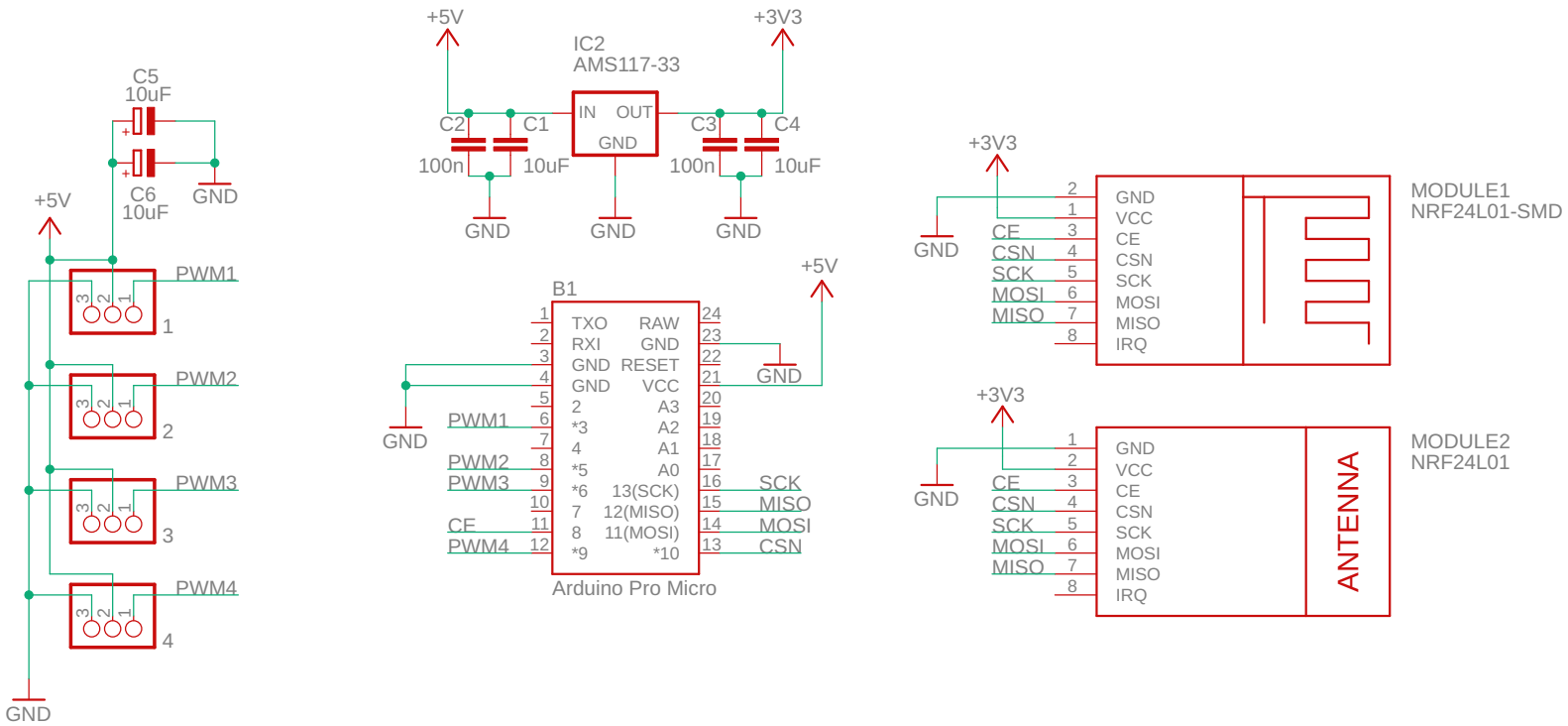

LASKKIT

BY NC SA

Receiver

10.12.2020 13:02

Sheet: 1/1