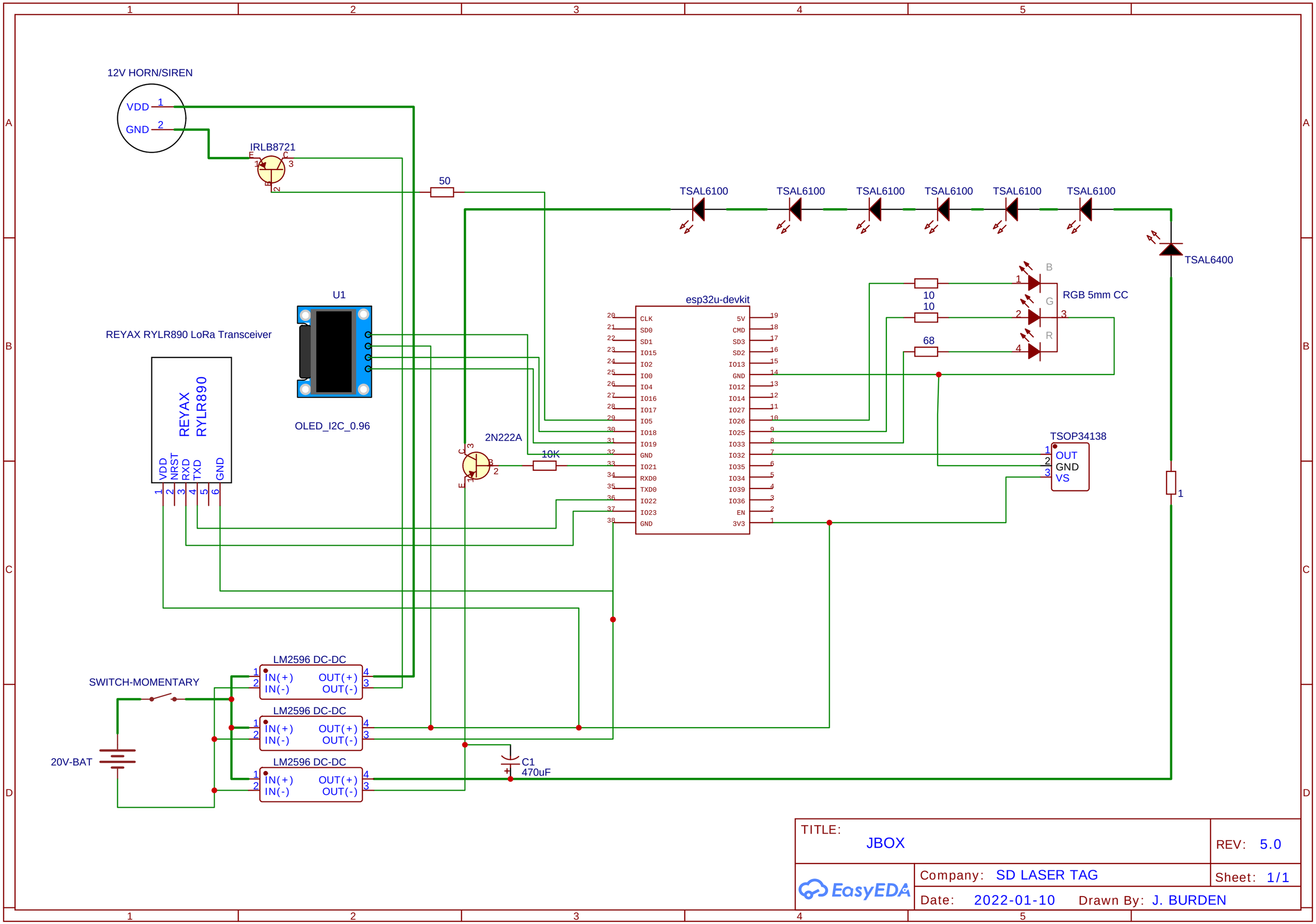

TITLE: JBOX		REV: 5.0
EasyEDA	Company: SD LASER TAG	Sheet: 1/1
	Date: 2022-01-10 Drawn By: J. BURDEN	