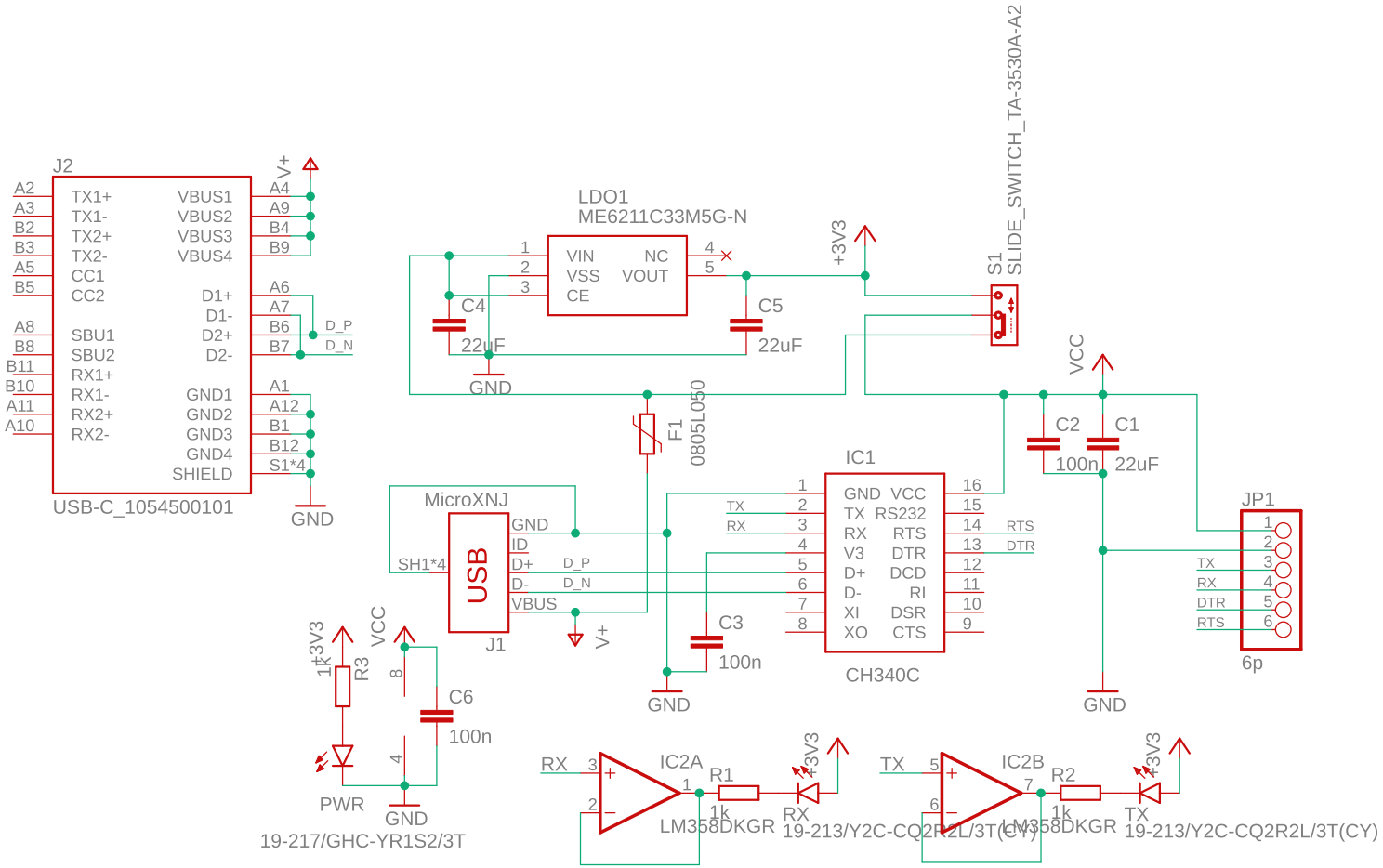

CH340-Programmer

01.06.2021 10:09

Sheet: 1/1