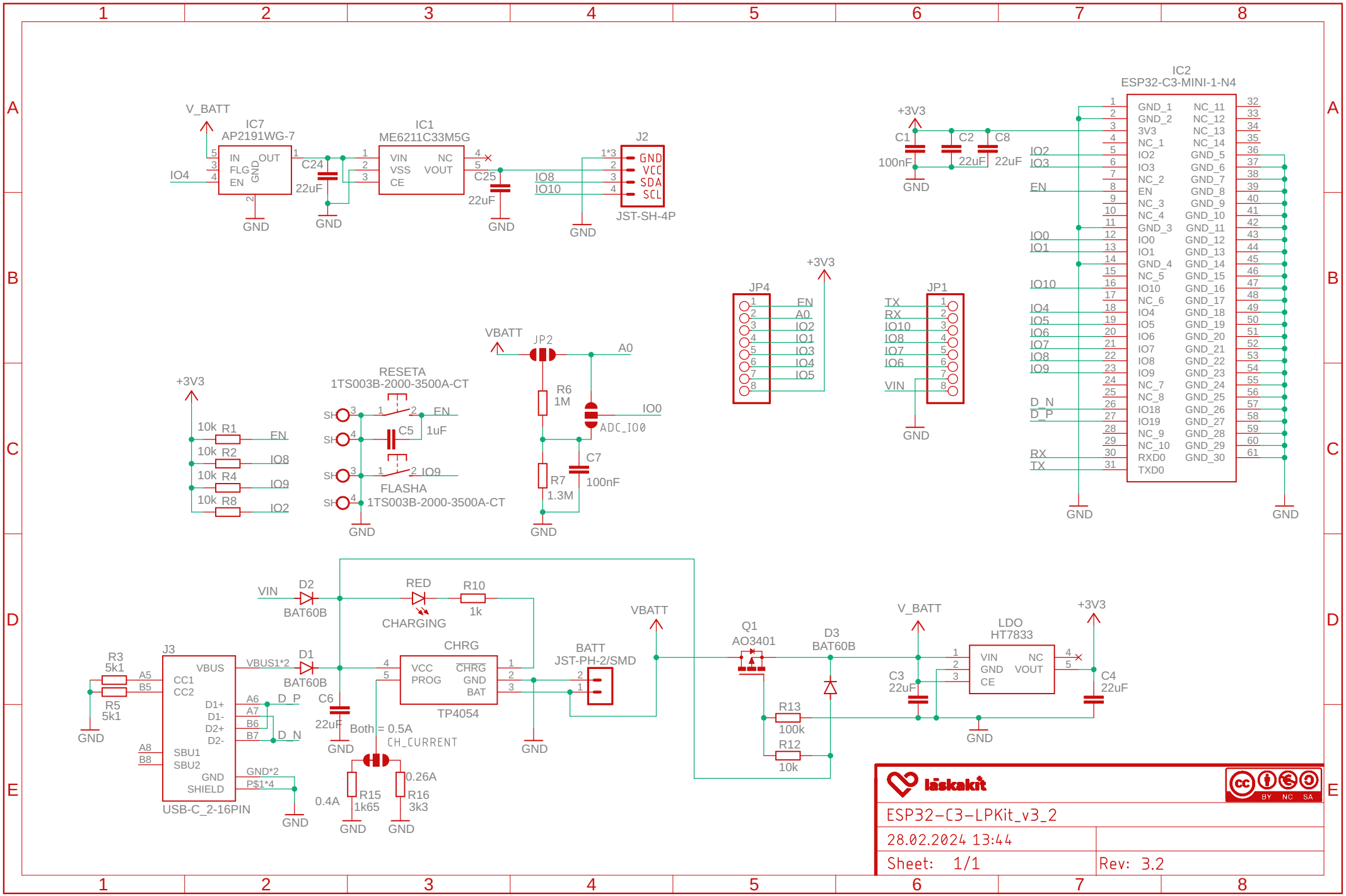
IC7
AP2191WG-7
IN
OUT
FLG
EN
GND
V_BATT
IO4
C24
22uF
IC1
ME6211C33M5G
VIN
NC
VSS
VOUT
CE
C25
22uF
IO8
IO10
J2
GND
VCC
SDA
SCL
JST-SH-4P
IC2
ESP32-C3-MINI-1-N4
+3V3
C1
100nF
C2
22uF
C8
22uF
IO2
IO3
EN
IO0
IO1
IO10
IO4
IO5
IO6
IO7
IO8
IO9
D_N
D_P
RX
TX
JP4
JP1
VIN
VBATT
JP2
A0
R6
1M
ADC_IO0
C7
100nF
R7
1.3M
RESETA
1TS003B-2000-3500A-CT
C5
1uF
FLASHA
1TS003B-2000-3500A-CT
R1
R2
R4
R8
10k
IO9
VIN
D2
BAT60B
RED
CHARGING
R10
1k
J3
USB-C_2-16PIN
R3
5k1
R5
5k1
VBUS1*2
D1
BAT60B
C6
22uF
CHRG
VCC
PROG
CHRG
GND
BAT
TP4054
Both = 0.5A
CH_CURRENT
0.4A
R15
1k65
R16
3k3
0.26A
BATT
JST-PH-2/SMD
Q1
AO3401
D3
BAT60B
R13
100k
R12
10k
V_BATT
C3
22uF
LDO
HT7833
C4
22uF
läskakit
ESP32-C3-LPKit_v3_2
28.02.2024 13:44
Sheet: 1/1
Rev: 3.2