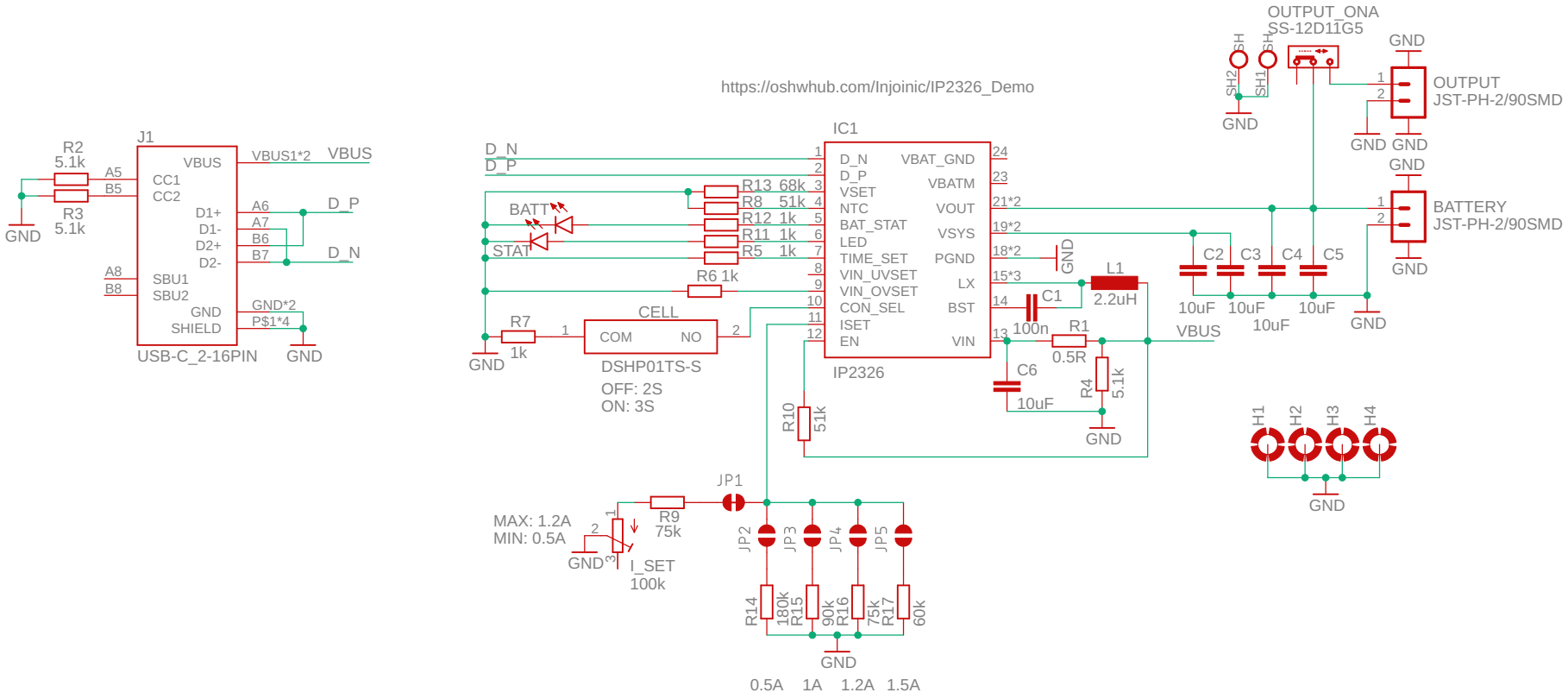

läskakit

IP2326_2-3S_charger

not saved!

Sheet: 1/1

Rev: 1.1