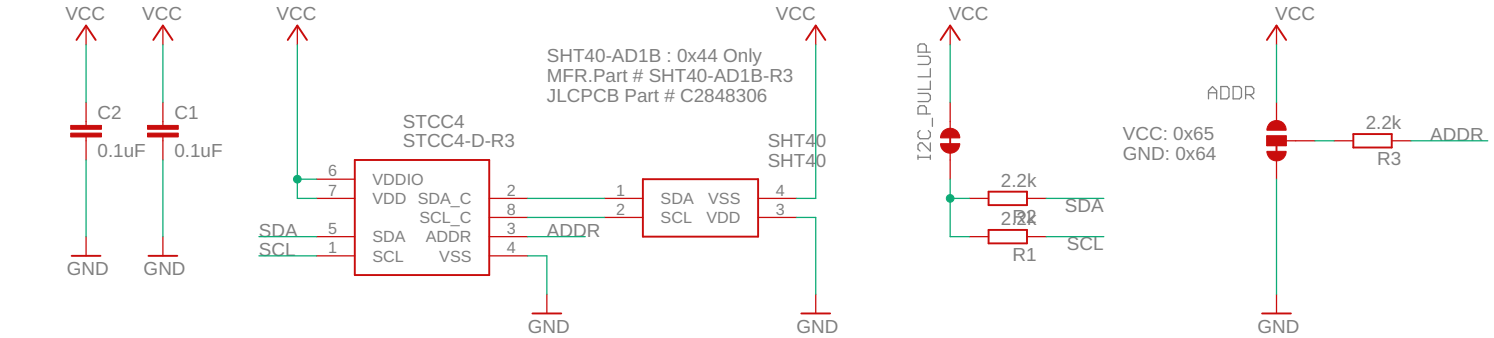

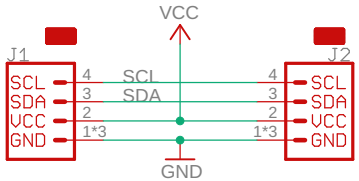

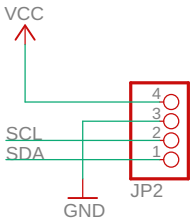

>CNAME	
STCC4-CO2-Sensor	
15.08.2025 21:15	>DESIGNER
Sheet: 1/1	Rev:1.0