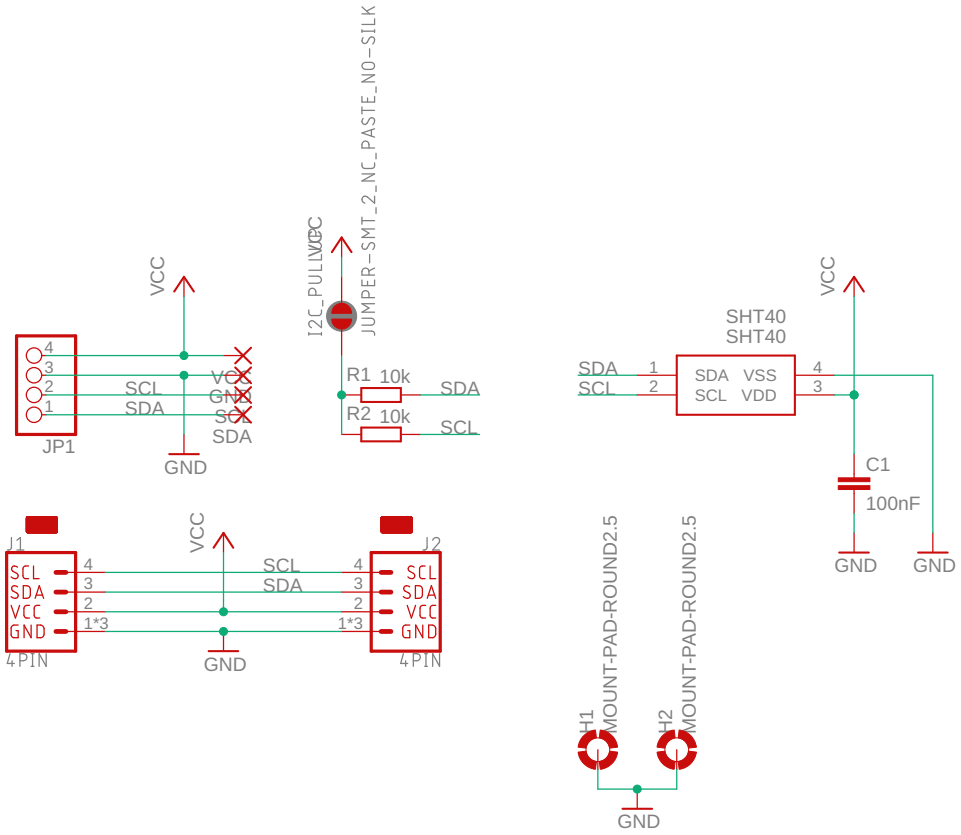

>CNAME	
Temp-HumSensor_SHT40_uSup	
14.02.2022 13:12	>DESIGNER
Sheet: 1/1	Rev: >CREVISION