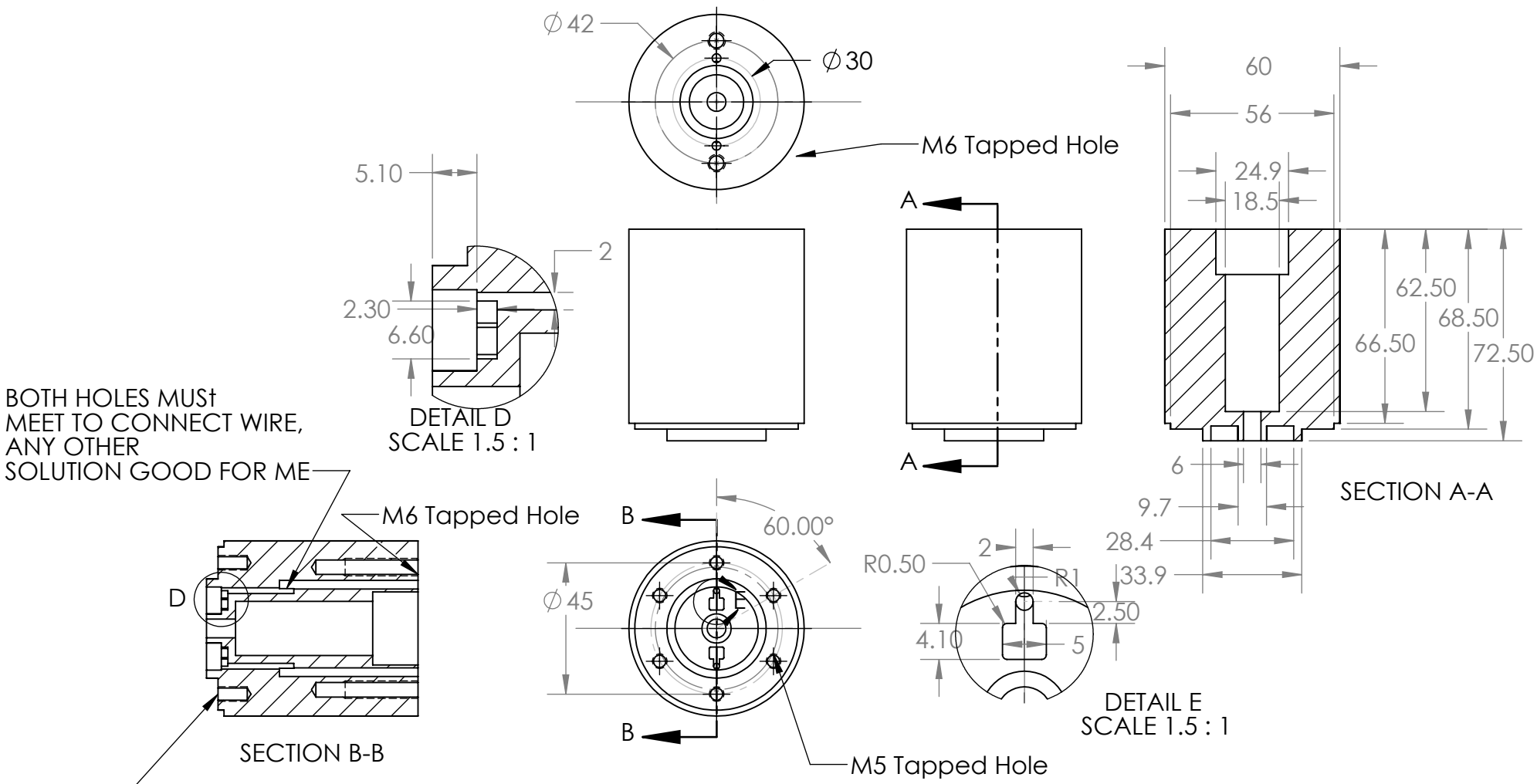

-->M5 and M6 HOLES
DONT NEED TO BE TAPED

UNLESS OTHERWISE SPECIFIED: DIMENSIONS ARE IN MILLIMETERS SURFACE FINISH: TOLERANCES: LINEAR: ANGULAR:	FINISH:	DEBUR AND BREAK SHARP EDGES	DO NOT SCALE DRAWING	REVISION	
	NAME	SIGNATURE	DATE	TITLE:	
DRAWN					
CHK'D					
APPV'D					
MFG					
Q.A			MATERIAL:	DWG NO.	A1
			WEIGHT:	SCALE:1:2	SHEET 1 OF 1

N_TEFLON_UP^HEAD_ptt2