Busway Systems

Catalog
5600CT9101R03/18

2018

Class 5600

Powerbus™ 100-400 A

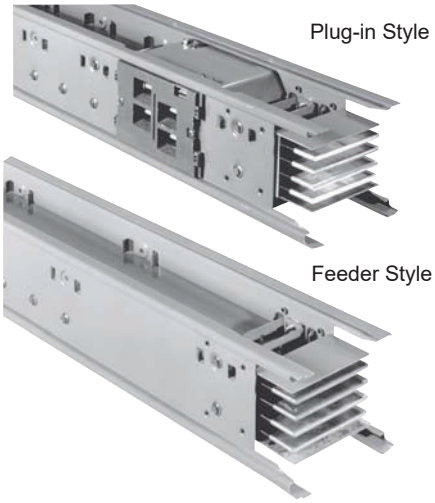

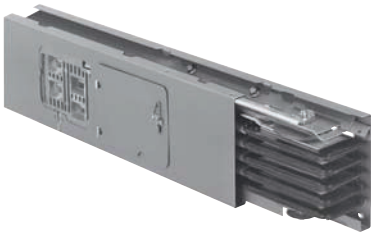

I-Line™ Plug-in Busway 225-600 A

I-Line II Busway 800-5000 A

Power-Zone™ Busway

I-Line Plug-in Units

SQUARE D™

by Schneider Electric

Section 10—Powerbus™ Plug-in Busway

Product Descriptions

Powerbus™ plug-in busway, manufactured by Schneider Electric, was designed specifically to address the low power distribution needs of industrial and commercial customers. Schneider Electric has applied over 50 years of experience in the busway business to develop a reliable low power distribution system that will reduce installation time and cost, as well as provide the flexibility to make future modifications quickly and easily to processes and facilities.

Powerbus Busway System

General Information

Powerbus construction consists of a lightweight electrical grade, all-aluminum housing with silver-plated copper conductor bars for maximum electrical efficiency. The total product offering includes straight sections, fittings, accessories, and plug-in units for a total installation. The busway is available in 400 A, 225 A, and 100 A for system voltages to 600 V. The standard offer includes a durable black powder coat paint finish.

Straight sections of busway are offered in 4 ft / 48 in. (1.2 m / 1200 mm) and 10 ft / 120 in. (3 m / 3000 m) lengths. Each opening is rated IP2X against solid object ingress (International Standards IP Protection Classification). Fittings include left and right elbows, tap boxes, and crosses, with accessory items such as hangers, end closures, and wall flanges completing the basic system. The enhanced plug-in offer provides 20 plug-in openings per 10 ft / 120 in. (3 m / 3048 mm) of straight length and 6 plug-in openings per 4 ft / 48 in. (1.2 m / 1200 mm) of straight length. Plug-in units are available in a wide variety of ready-to-assemble and factory-assembled devices.

The standard level of protection for the busway straight lengths and fittings is to International Standards IP Protection Classification IP40. For IP54 protection rating and seismic application, contact your local Schneider Electric representative.

Busbar Configuration

Powerbus can be supplied with up to five (5) conductor bars to accommodate a wide range of electrical systems. This includes 200% neutral capability to address applications where harmonic currents are a concern. Powerbus can also provide an isolated ground for electrical systems that require a “clean” ground, in addition to the standard 50% integral ground.

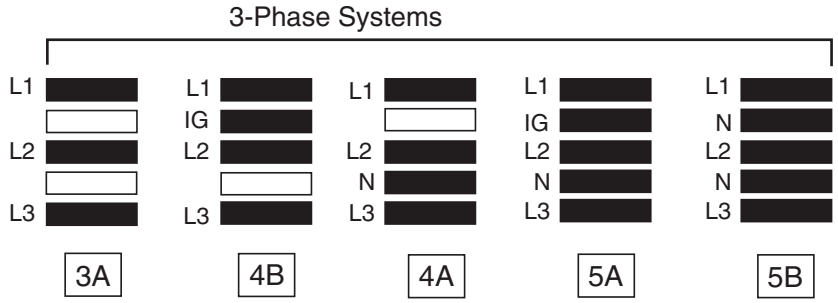

NOTE: Single-phase and DC systems are also available. Contact your local Schneider Electric representative.

© 1986–2018 Schneider Electric
All Rights Reserved

Maintenance-Free Joint

For maximum reliability, the Powerbus joint employs a high-pressure, spring-type, copper connection that requires no maintenance after installation.

Physical and Electrical Data

Table 88: Short-Circuit Rating

Product	Short-Circuit Current Rating KA, RMS Symmetrical		Impedance[1] Line-to-Neutral (milliohms / 100 ft)			DC Resistance [1] of Aluminum Housing Ground (milliohms / 100 ft)
	UL 3-Cycle Test	Series-Connected with Fuse[2]	R	X60 Hz	X50 Hz	
100 A	14 kA	200 kA	15.34	7.59	6.32	1.25
225 A	22 kA	200 kA	6.40	4.00	3.33	1.15
400 A	35 kA	200 kA	3.74	2.19	1.83	0.54

1 Busway impedance and housing ground resistance are at 176 °F (80 °C) operating temperature

2 Busway connected in series with a Class J or Class T fuse

Table 89: Short Circuit Ratings: RMS Symmetrical (Series Rated with an Upstream Circuit Breaker)[1]

Voltage, VAC	Capacity	Breaker Type[2]	RMS SYM Amps
240	100 A	HG or JG	65,000
	225 A	HG or JG	
	400 A	HG, JG, or LG	
480	100 A	HJ or JJ	65,000
	225 A	HJ or JJ	
	400 A	HJ, JJ, or LJ	
600	100 A	HL or JL	50,000
	225 A	HL or JL	
	400 A	HL, JL, or LL	

1 Interrupt rating of the busway system is limited to the lowest rated plug-in unit installed on the bus unless the plug-in unit carries a series rating with the main breaker used or unless a short circuit study has been completed and shows otherwise.

2 See Powerbus Plug-in Units in Table 90 for available equipment with series ratings with these breakers.

© 1986–2018 Schneider Electric
All Rights Reserved

A series rating of the busway system may be achieved when the equipment listed in Table 90 is used with the indicated breaker at the voltage listed.

When protected by the indicated circuit breaker, the following Powerbus products listed in Table 90 are rated for use on a circuit capable of delivering not more than the RMS symmetrical amperes at the voltage shown.

Table 90: Powerbus Plug-In Unit Short Circuit Series Ratings[1]

Catalog Prefix	Voltage	Short Circuit Rating (RMS SYM. AMPS) with no receptacle or drop cord	Short Circuit Rating (RMS SYM. AMPS) with receptacle or drop cord	Main Breaker
PBPFA	600	50,000	14,000	HL, JL, or LL
	480	65,000	18,000	HJ, JJ, or LI
	240	65,000	25,000	HG, JG, or LG
	120	65,000	25,000	HG, JG, or LG
PBPQO	240	65,000	10,000	HG or JG
PBPQOR		65,000	10,000	HG or JG
PBPQOD		65,000	10,000	HG or JG
PBPQHD		65,000	10,000	HG, JG, or LG
PBPEDU	120	65,000	10,000	HG, JG, or LG
	240	65,000	10,000	HG, JG, or LG
	480	65,000	10,000	HJ, JJ, or LI
PBPEGU	120	65,000	10,000	HG, JG, or LG
	240	65,000	10,000	HG, JG, or LG
	480	65,000	10,000	HJ, JJ, or LI

1 The series rating information in this table is taken from the UL Yellowbook information for breakers used in the plug-in units listed under Catalog Prefix.

Table 91: Voltage Drop

Product	Voltage Drop (60 Hz @ Rated Load) (Average Phase Line-to-Line Voltage Drop in Volts / 100 ft for Varying Power Factors)					
	100%	90%	80%	70%	60%	50%
100 A	2.657	2.964	2.914	2.799	2.646	2.467
225 A	2.494	2.923	2.929	2.858	2.742	2.596
400 A	2.590	2.992	2.984	2.898	2.770	2.610

NOTES:

1. Values shown are based on single concentrated load at the end of a busway run. For distributed loading, divide the values shown by two (2).
2. For balanced 3-phase line-to-line voltage drop of 4-wire busway, use values from the table above.
3. For balanced 3-phase line-to-neutral voltage drop, multiply values by 0.577.
4. For single-phase voltage drop, multiply values by 1.15.
5. For other than rated current, multiply values by the ratio of: Actual Current ÷ Rated Current
6. For total voltage drop, multiply values by the ratio of: Actual Length ÷ 100 ft
7. Voltage drop calculations for 50 Hz can be made by substituting the appropriate value from Table 1. For other frequency values, contact Schneider Electric at 1-888-778-2733.

© 1986–2018 Schneider Electric
All Rights Reserved

Table 92: Physical Data

Product	Weights (Based on Busbar Configuration)					Busbar Size
	3 bar	4 bar		5 bar		(The same bar size is used for all configurations.)
	3A	4B	4A	5A	5B	
100 A	2.9 lbs/ft (4.32 kg/m)	3.2 lbs/ft (4.76 kg/m)		3.4 lbs/ft (5.06 kg/m)		0.125 x 0.50 inches (3.18 x 12.70 mm)
225 A	4.5 lbs/ft (6.70 kg/m)	5.1 lbs/ft (7.59 kg/m)		5.8 lbs/ft (8.63 kg/m)		0.125 x 1.38 inches (3.18 x 35.05 mm)
400 A	6.9 lbs/ft (10.27 kg/m)	8.0 lbs/ft (11.91 kg/m)		9.0 lbs/ft (13.39 kg/m)		0.125 x 2.25 inches (3.18 x 57.15 mm)

Catalog Numbering System

Table 93: Busway Catalog Numbering System

PB	CE	4A	225A	ST	120	Housing Color
		Busbar Configuration	Amperage Rating	Type of Device	Length	
PB = Powerbus	CE = Copper Plug-In Enhanced (20 openings per 10 ft / 120 in. (3 m / 3048 mm) CF = Copper Fitting	Refer to Figure 130.	100 A= 100 A 225 A= 225 A 400 A = 400 A All rated to 600 V max	ST = Straight Length	120 = 10 ft 048 = 4 ft	B = Black[1]
				LL = Elbow Left		
				LR = Elbow Right		
				CR = Cross		
				TB = Tap Box / Power Feed Unit		

[1] The 100 A busway and 225 A busway are also available in the natural aluminum color.

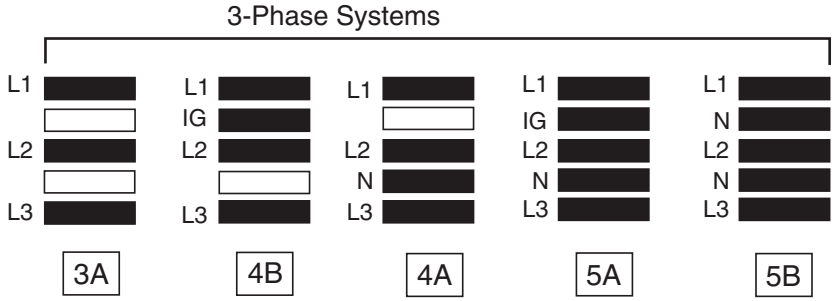

Figure 130: Busbar Configuration

© 1986–2018 Schneider Electric
All Rights Reserved

Dimensions—Straight Lengths, Fittings, and Accessories

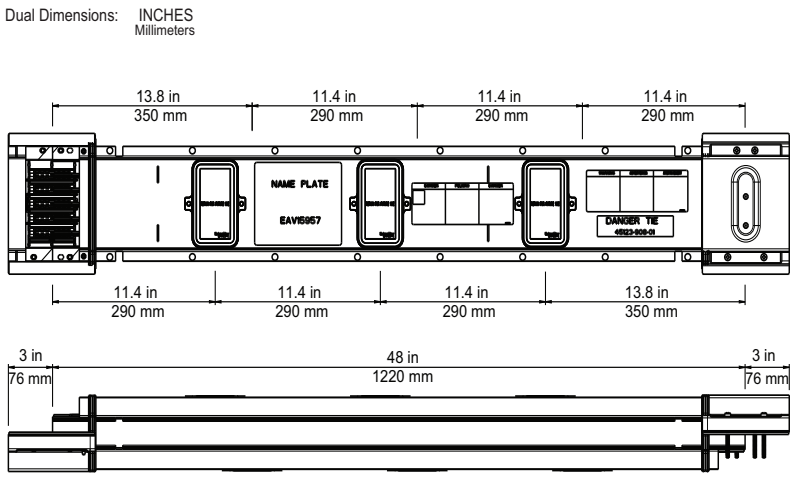

Catalog Numbers: PBCE[‡]400AST048B, PBCE[‡]225AST048B, PBCE[‡]100AST048B

Figure 131: Four-Foot Straight Lengths—Enhanced Plug-In Offer

‡ To complete the catalog number, insert the configuration type from Figure 130 on page 128.

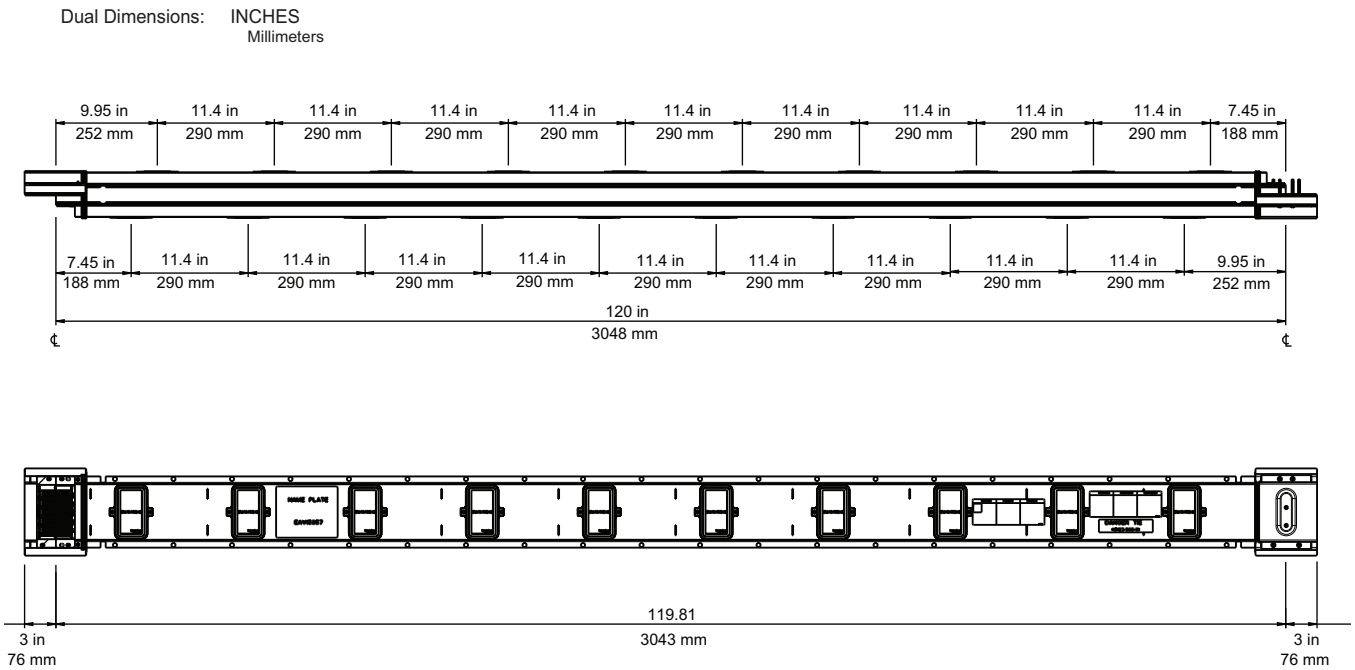

Catalog numbers are PBCE[‡]400AST120B, PBCE[‡]225AST120B, and PBCE[‡]100AST120B

Figure 132: Ten-Foot Straight Lengths—Enhanced Plug-In Offer

‡ To complete the catalog number, insert the configuration type from Figure 130 on page 128.

© 1986–2018 Schneider Electric
All Rights Reserved

Joint Detail

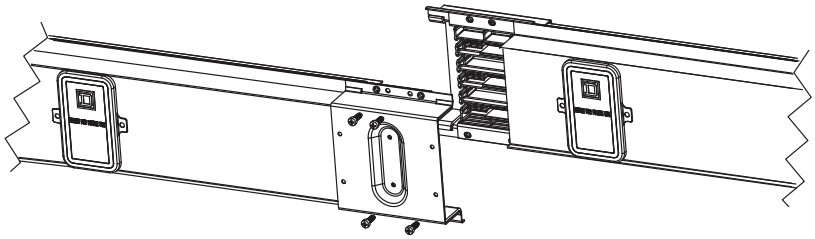

Cross Sections

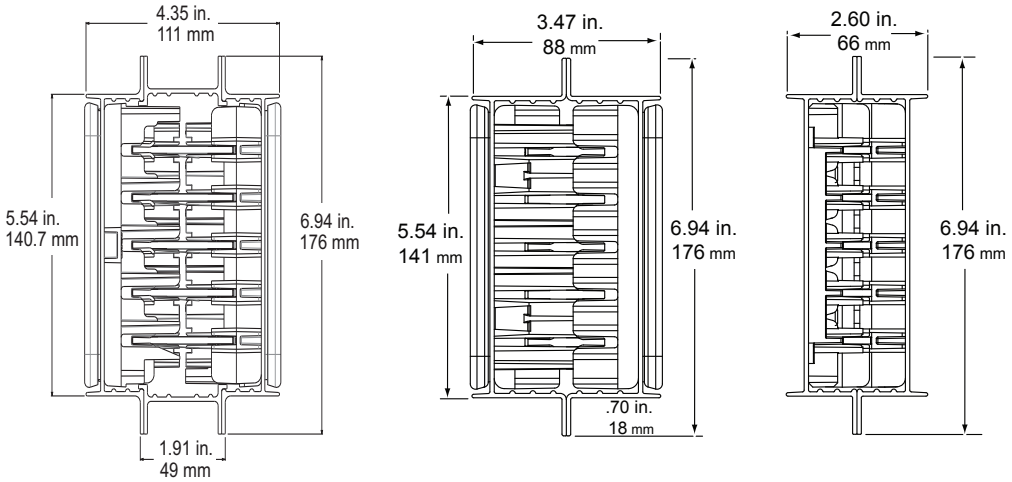

© 1986–2018 Schneider Electric
All Rights Reserved

Elbow Left

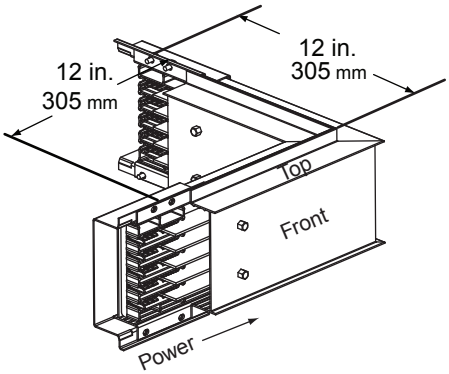

Catalog Number: 400 A = PBCF[‡]400ALLB,
225 A = PBCF[‡]225ALLB, 100 A = PBCF[‡]100ALLB

Elbow Right

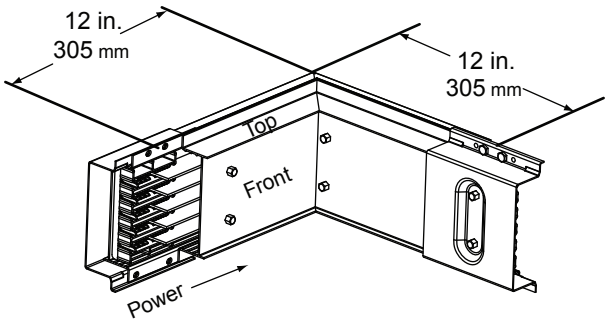

Catalog Number: 400 A = PBCF[‡]400ALRB,
225 A = PBCF[‡]225ALRB, 100 A = PBCF[‡]100ALRB

Cross

NOTE: For applications that require a tee, a cross should be used and the unused end should be capped off.

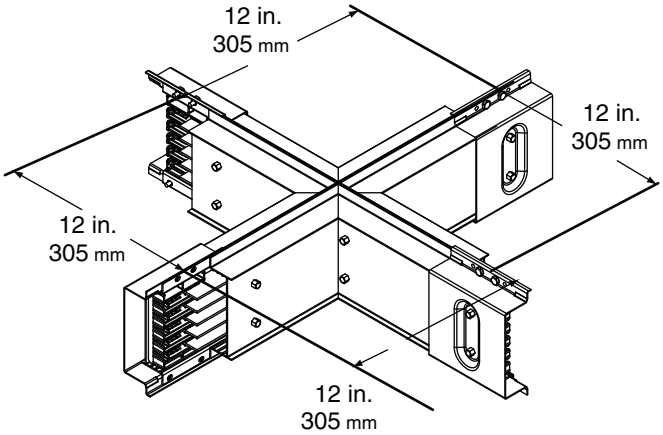

Catalog Number: 400 A = PBCF[‡]400ACRB,
225 A = PBCF[‡]225ACRB, 100 A = PBCF[‡]100ACRB

‡ To complete the catalog number, insert the configuration type from Figure 130 on page 128.

© 1986–2018 Schneider Electric
All Rights Reserved

Tap Box / Power Feed Unit

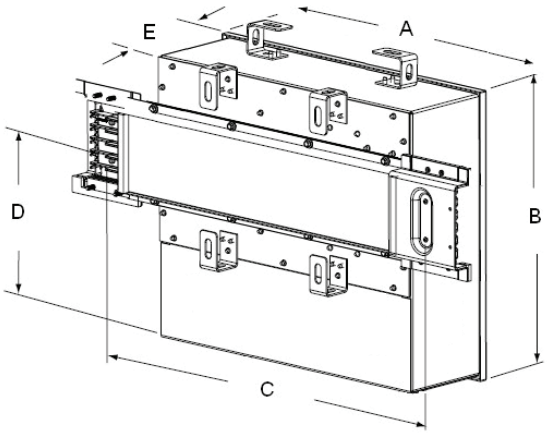

Catalog Number:
400 A = PBCF[‡]400ATBB, 225 A = PBCF[‡]225ATBB,
100 A = PBCF[‡]100ATBB

‡ To complete the catalog number, insert the configuration type from Figure 130 on page 128.

Table 94: Tap Box/Power Feed Unit: Specifications

Product	Lugs per Phase and Neutral		Ground Lugs	
	Quantity	Size	Quantity	Size
100 A	1	#6 - 300 kcmil	1	#10 - 2/0
225 A	1	#6 - 300 kcmil	1	#10 - 2/0
400 A	2	#1 - 600 kcmil	2	#10 - 2/0

Table 95: Tap Box/Power Feed Unit: Dimensions

Product	Weight	A		B		C		D		E	
		IN	mm	IN	mm	IN	mm	IN	mm	IN	mm
100 A	50 lbs	16.6	422	14.5	368	24	762	9.5[1]	241	6.5	165
225 A	65 lbs	31	787	14.5	368	38	965	6.5	165	8	178
400 A	95 lbs	35.5	902	14.5	368	43	1092	6.5	165	8	178

[1] For 100 A only, could be the dimension of the enclosure above or below the busway depending on preference.

© 1986–2018 Schneider Electric
All Rights Reserved

Tap Box / Power Feed Unit with Metering and Communication

The Powerbus™ tap box is available with an optional Powerlogic™ PM5350 meter and gateway. The power meter provides an integrated display and offers all the power and energy measurement capabilities required to monitor the busway run in a single 3.8 x 3.8 in. (96 x 96 mm) unit. The meter is easy to operate with intuitive navigation and self-guided menus. The gateway is an integrated, web-based gateway-server that provides the ability to remotely monitor the meter through an Ethernet connection. An Ethernet port is available on the enclosure for integration into any power monitoring and control system.

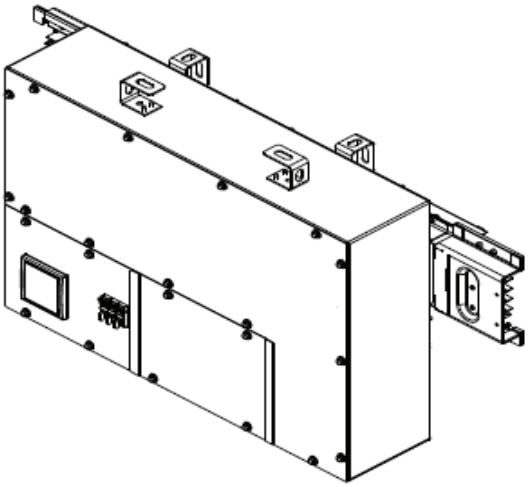

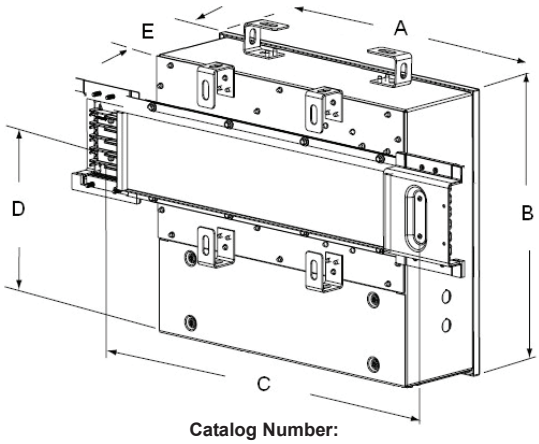

Catalog Number:
400 A = PBCF[‡]400ATBM( )B, 225 A = PBCF[‡]225ATBM( )B,
Top Cable Access: 100 A = PBCF[‡]100ATBM( )LB,
Bottom Cable Access: 100 A = PBCF[‡]100ATBM( )UB

‡ To complete the catalog number, insert the configuration type from Figure 135 on page 144.

The PM5350 meter will be tested at the factory before shipment, so the catalog suffix will vary based on the system voltage. Replace the "( )" in the catalog numbers shown above with the meter suffix number in Table 98 that corresponds to the system voltage of the busway.

Table 96: Tap Box/Power Feed Unit with Metering and Communications: Specifications

Product	Lugs per Phase and Neutral		Ground Lugs	
	Quantity	Size	Quantity	Size
100 A	1	#6 - 300 kcmil	1	#10 - 2/0
225 A	1	#6 - 300 kcmil	1	#10 - 2/0
400 A	2	#1 - 600 kcmil	2	#10 - 2/0

Table 97: Tap Box/Power Feed Unit with Metering and Communications: Dimensions

Product	Weight	A		B		C		D		E	
		IN	mm	IN	mm	IN	mm	IN	mm	IN	mm
100 A	70 lbs	23.5	597	21	533	30	762	13	330	8	178
225 A	90 lbs	31	787	21	533	38	965	14.6	371	8	178
400 A	120 lbs	35.5	902	21	533	43	1092	14.6	371	8	178

Table 98: Meter Suffix

Meter Suffix	System Voltage
1	208Y/120 V 3Ø4W
2	240 V 3Ø3W
4	415/240V 3Ø4W
5	480Y/277V 3Ø4W

NOTE: Contact your local Schneider Electric representative for additional system voltages.

© 1986–2018 Schneider Electric
All Rights Reserved

End Closure

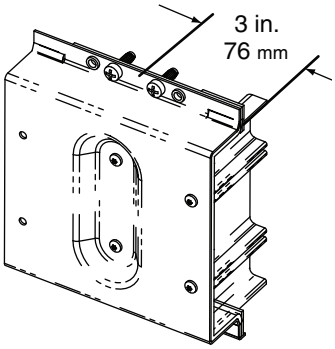

Catalog Number:
400 A = PB400AEC
225 A = PB225AEC
100 A = PB100AEC

Wall Flange

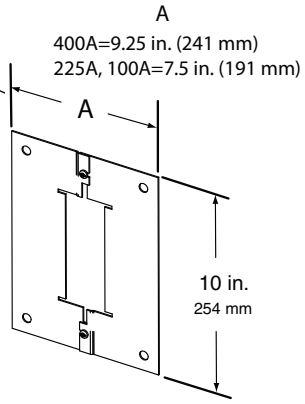

Catalog Number:
400 A = PB400WF
225 A = PB225WF
100 A = PB100WF

Standard Hanger■

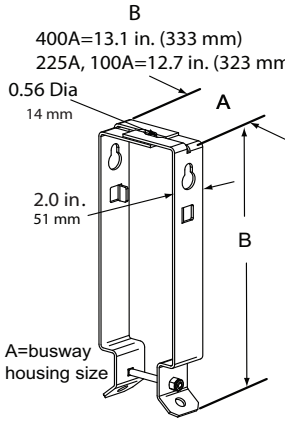

Catalog Number:
400 A = PB400FH
225 A = PB225FH
100 A = PB100FH

Support Clamp

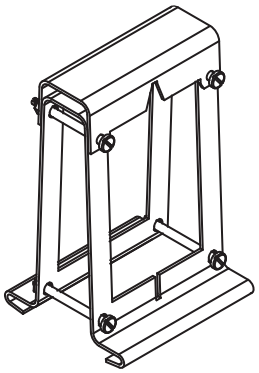

Catalog Number:
PB225SC_
(Suitable for 225 A and 100 A busway. Insert 4 or 6 for fastening clamp to 4-inch or 6-inch I-Beam)

Side-Mount Hanger■

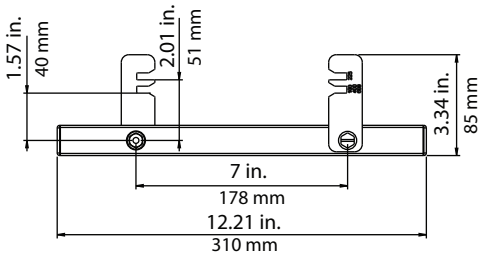

Catalog Number:
400 A = PB400HFW
225 A = PB225HFW
100 A = PB100HFW

Vertical Sway Brace■

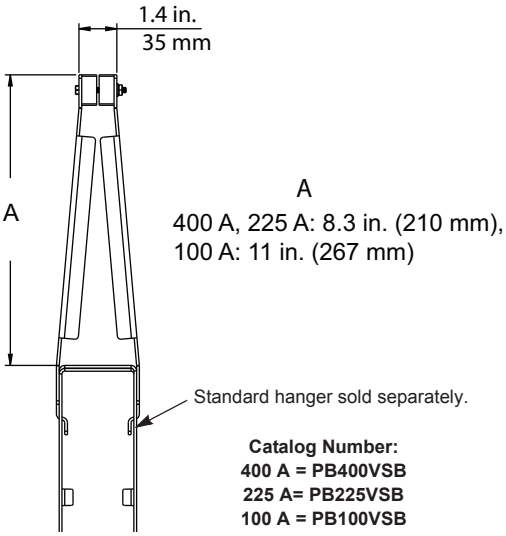

Catalog Number:
400 A = PB400VSB
225 A= PB225VSB
100 A = PB100VSB

■ Maximum hanger spacing is 5 ft (1.5 m). Nuts and drop rods provided by customer.

NetShelter™ IT Rack-Mounting Brackets

Bracket Type	Catalog Number
PB Busway Rack Mounting Bracket, Single Run	PBRMKS
PB Busway Rack Mounting Bracket, Double Run	PBRMKD
PB Busway Rack Mounting Sway Braces	PBRMSB
PB Busway Rack Mounting Drop-in Trough and Partition Brackets	PBRMDB
PB Busway Rack Mounting Skirt, 11.8 in. (300 mm) wide	PBRMSKT300
PB Busway Rack Mounting Skirt, 23.6 in. (600 mm) wide	PBRMSKT600
PB Busway Rack Mounting Skirt, 29.5 in. (750 mm) wide	PBRMSKT750
PB Busway Rack Mount Extra Hardware	PBRMHW

NOTE: The Busway Rack Mounting Kits are compatible with 100 A, 225 A, and 400 A Busway solutions.

© 1986–2018 Schneider Electric
All Rights Reserved

Powerbus Plug-In Units

General Information

Powerbus plug-in units provide a safe, reliable, and easy-to-use method for tapping power off the busway exactly where it is needed. FA units are rated for a maximum of 100 A / 600 V, EDU/EGU units are rated for a maximum of 480Y / 277 V, and QO/QOR/QOU units are rated for a maximum of 100 A / 240 V. All units are protected to NEMA 1. The EDU/EGU units have optional metering capabilities available. An optional kit can raise the level of protection to IP54 on FA/QO units; the same kit raises a receptacle-type unit (QOR) to IPX3.

Ready-to-Assemble Plug-In Units

These “enclosure only” devices have provisions for field-mounting a variety of FA or QO type circuit breakers and receptacles, if required:

- Tap Box (Plug-In): for cabling power from busway
- FA Plug-In Unit: with provisions to accommodate field-installed FA circuit breakers
- QO Plug-In Unit: with provisions to accommodate field-installed QO circuit breakers
- QOR Plug-In Units: with provisions to accommodate field-installed QO circuit breakers plus receptacles

NOTE: Only three breaker spaces are available for all the units listed above.

Factory-Assembled Plug-In Units

As a convenient option, Schneider Electric will factory install the FA or QO circuit breakers (and receptacles, if desired) into the enclosure and completely wire them so the units are ready for immediate installation onto the busway as soon as they arrive in the field.

EDU/EGU and QOU/QOD plug-in units are factory-installed with circuit breakers, drop cords, and connectors.

NOTES:

— The QOU and EDU/EGU devices are only available as factory-assembled and include a cover-type front. The QOD unit is available with a door front.

— Six breaker spaces are available for the QOU/QOD unit.

— Three breaker spaces are available for the EDU/EGU unit.

Table 99: Circuit Breakers

Circuit Breaker	Ampere Rating	Interrupting Ratings			Number of Poles
		240 V	480 Y/277 V	600 V	
QO	15–100	10 kA	—	—	1[1], 2, or 3
QOB		10 kA	—	—	
QOU		10 kA	—	—	
QOU-VH	15-60	22 kA	—	—	1, 2, or 3[2]
EDB	15–100	25 kA	18 kA	—	1[1], 2, or 3
EGB		35 kA	35 kA	—	
FA		25 kA	18 kA	14 kA	3

[1] 1-pole breakers may not be available in all amperage ratings.

[2] 3-pole breaker available up to 30 A max.

The short circuit ratings of plug-in units are limited by the mounted busway rating. Receptacles and connectors have a 10 kA short circuit rating.

© 1986–2018 Schneider Electric
All Rights Reserved

Table 100: Receptacles

Receptacle	Ampere Rating	Number of Poles
Duplex—Commercial	15–30	1, 2, or 3
Duplex—Industrial		
Duplex—Isolated Ground		
Locking		
Locking—240 V		
Locking—480 V		

Table 101: Enclosure Ratings

Plug-In Device	Standard Rating	Optional Rating[1]
Tap Box[2]	NEMA 1	IP54
QOR		IPX3 using optional kit, PBP54100QO IP54 using optional kit, PBP54100QO IP54 using optional kit, PBP54100FA
QO		
FA		
EDB		None
EGB		None
QOU		None
QOD		IP54

1 The degree of protection can be increased to IP43 or IP54 using the appropriately rated receptacles.

2 100 A tap box rated IP54 only.

Catalog Numbering System

Table 102: Ready-to-Assemble[1] / Factory-Assembled Plug-In Unit Catalog Numbering System— Devices with Receptacle / Circuit Breaker

PBP	QOR Type of Device	5A Plug-In Jaw Configuration	100 Maximum Amperage Rating	P54 IP Rating	M1 Receptacle Configuration	15B Circuit Breaker and Rating
Powerbus plug-in device	QO = QO circuit breaker only	Refer to the “Busbar Configuration Table” on page 137.	100	Blank = NEMA 1	Refer to the “Receptacle/Circuit Breaker Type Configuration” table on 137 and the “Plug-In Units (Factory-Assembled)” tables on page 139.	15 = 15 Amp QO
	QOR = QO circuit breaker and receptacle			PX3 = IPX3 (QOR only)		15B = 15 Amp QOB
	FA = FA circuit breaker			P43 = IP43		20 = 20 Amp QO
	TB = Tap Box			P54 = IP54		20B = 20 Amp QOB

1 The circuit breakers and receptacles are provided by others.

Table 103: Factory-Assembled Plug-In Unit Catalog Numbering System—Devices with Drop Cords and Connectors

PBP	QOU Type of Device	4A Plug-In Jaw Configuration	100 Maximum Amperage Rating	O 1st Circuit Breaker Position	F 2nd Circuit Breaker Position	O 3rd Circuit Breaker Position	L5 Connector Type	15 Circuit Breaker Amperage Rating	M1 Meter	Carry Handle
Powerbus plug-in device	QOU = QOU circuit breaker unit EDU = EDB circuit breaker unit EGU = EGB circuit breaker unit	Refer to the “Busbar Configuration Table” on page 137.	100 A	Phase connection and drop cord length Refer to “Drop Cord Lengths” on page 137.	Phase connection and drop cord length Refer to “Drop Cord Lengths” on page 137.	Phase connection and drop cord length Refer to “Drop Cord Lengths” on page 137.	Refer to Table 112 on page 141.	15–60 A	M( )= Meter Option Refer to meter suffixes in Table 105 on page 137.	T = Carry Handle Option

© 1986–2018 Schneider Electric
All Rights Reserved

Figure 133: Busbar Configuration Table

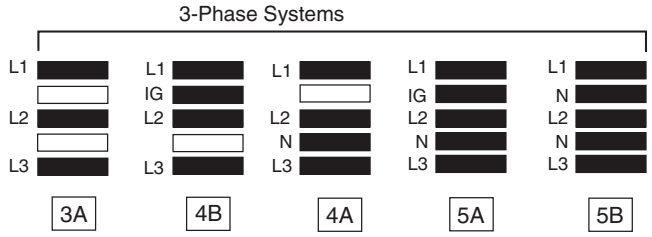

Figure 134: Receptacle/Circuit Breaker Type Configuration

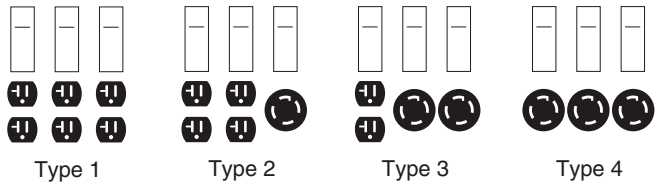

Table 104: Drop Cord Lengths[1]

Positions											
B	**C**	**D**	**E**	**F**	**G**	**H**	**I**	**J**	**K**	**L**	**O**
2 ft (0.6 m)	3 ft (0.9 m)	4 ft (1.2 m)	5 ft (1.5 m)	6 ft (1.8 m)	7 ft (2.0 m)	8 ft (2.4 m)	9 ft (2.7 m)	10 ft (3.0 m)	11 ft (3.4 m)	12 ft (3.7 m)	OPEN (No breaker/drop cord for this position)

1 One 1-pole breaker in the 1st circuit breaker position will be wired on the A phase. One 1-pole breaker in the 2nd circuit breaker position will be wired on the B phase. One 2-pole breaker in the 1st circuit breaker position will be wired on the A and B phases.

Table 105: Metering[1]

Meter Suffix	System Voltage
1	208Y/120 V 3Ø4W
2	240 V 3Ø3W
4	415/240 V 3Ø4W
5	480Y/277 V 3Ø4W

1 Metering only available in EDU/EGU units with drop cords and connectors.

© 1986–2018 Schneider Electric
All Rights Reserved

Plug-In Units (Ready-to-Assemble)

Tap Box (For 225 A and 100 A Busway Only)
Weight: 10 lbs. (5 kg)

NOTE: Conductor lugs–1 #14-1/0 per bar (e.g., "4A" configuration would have four lugs) Ground lugs–1 #14-1/0

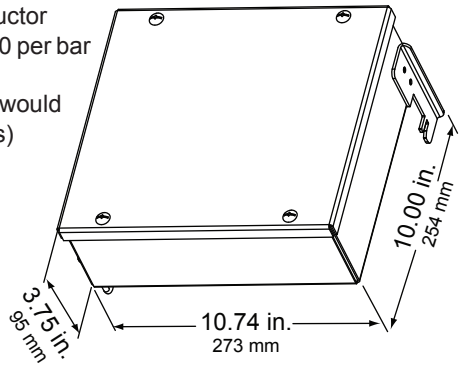

Busbar Configurations	Catalog Number
3A	PBPTB3A100
4B	PBPTB4B100
4A	PBPTB4A100
5A	PBPTB5A100

FA Unit (Provision for One 3-Phase FAP Breaker)
Weight: 13 lbs. (6 kg)

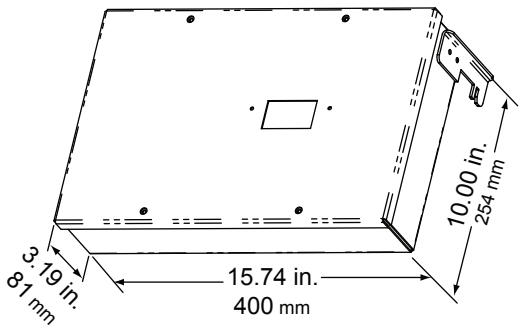

Busbar Configurations	Catalog Number
3A	PBPFA3A100
4B	PBPFA4B100
4A	PBPFA4A100
5A	PBPFA5A100

QO Unit (Provision for Three QO/QOB Breakers)
Weight: 13 lbs. (6 kg)

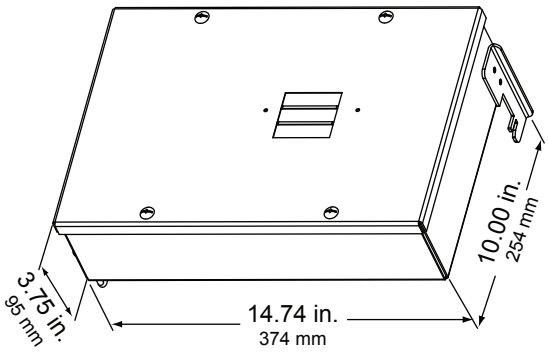

Busbar Configurations	Catalog Number
3A	PBPQO3A100
4B	PBPQO4B100
4A	PBPQO4A100
5A	PBPQO5A100

QOR Unit (Provision for Three QO/QOB Breakers and Three Receptacles)
Weight: 13 lbs. (6 kg)

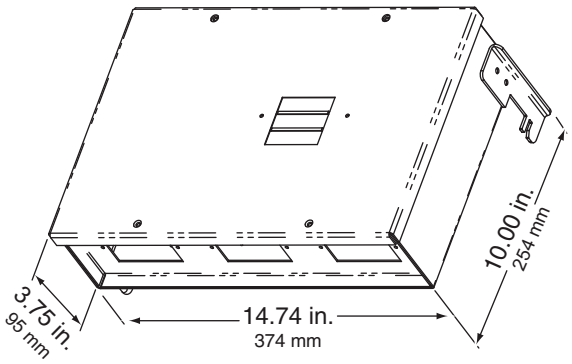

Busbar Configurations	Catalog Number
3A	PBPQOR3A100
4B	PBPQOR4B100
4A	PBPQOR4A100
5A	PBPQOR5A100

© 1986–2018 Schneider Electric
All Rights Reserved

Plug-In Units (Factory-Assembled)

Table 106: FA Unit with Circuit Breaker—600 V Max

FA Unit with Circuit Breaker
Weight: 17 lbs. (8 kg)

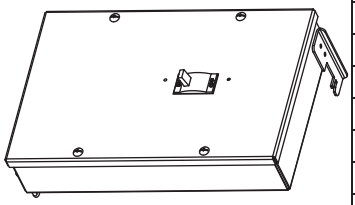

Breaker Rating	Catalog Number				
	3A Configuration	4B Configuration	4A Configuration	5A Configuration	5B Configuration
15	PBPFA3A100A015	PBPFA4B100A015	PBPFA4A100A015	PBPFA5A100A015	PBPFA5B100A015
20	PBPFA3A100A020	PBPFA4B100A020	PBPFA4A100A020	PBPFA5A100A020	PBPFA5B100A020
30	PBPFA3A100A030	PBPFA4B100A030	PBPFA4A100A030	PBPFA5A100A030	PBPFA5B100A030
40	PBPFA3A100A040	PBPFA4B100A040	PBPFA4A100A040	PBPFA5A100A040	PBPFA5B100A040
50	PBPFA3A100A050	PBPFA4B100A050	PBPFA4A100A050	PBPFA5A100A050	PBPFA5B100A050
60	PBPFA3A100A060	PBPFA4B100A060	PBPFA4A100A060	PBPFA5A100A060	PBPFA5B100A060
70	PBPFA3A100A070	PBPFA4B100A070	PBPFA4A100A070	PBPFA5A100A070	PBPFA5B100A070
80	PBPFA3A100A080	PBPFA4B100A080	PBPFA4A100A080	PBPFA5A100A080	PBPFA5B100A080
90	PBPFA3A100A090	PBPFA4B100A090	PBPFA4A100A090	PBPFA5A100A090	PBPFA5B100A090
100	PBPFA3A100A100	PBPFA4B100A100	PBPFA4A100A100	PBPFA5A100A100	PBPFA5B100A100

Table 107: QO/QOR Units with Circuit Breakers and Receptacles—120 V[1]

QO Unit with Circuit Breaker
Weight: 14 lbs. (6 kg)

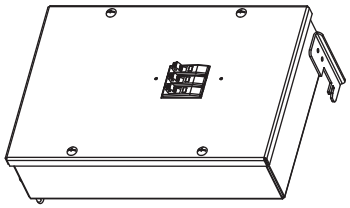

QOR Unit with Circuit Breaker and Receptacles
Weight: 15 lbs. (7 kg)

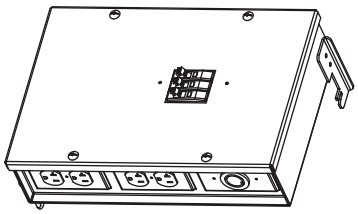

Circuit Breaker		Catalog Number		
Rating	Type	4A Configuration	5A Configuration	5B Configuration
Type 1—Three (3) Circuit Breakers Plus (3) Duplex Receptacles				
15	QO	PBPQOR4A100M115	PBPQOR5A100M115	PBPQOR5B100M115
15	QOB	PBPQOR4A100M115B	PBPQOR5A100M115B	PBPQOR5B100M115B
20	QO	PBPQOR4A100M120	PBPQOR5A100M120	PBPQOR5B100M120
20	QOB	PBPQOR4A100M120B	PBPQOR5A100M120B	PBPQOR5B100M120B
Type 2—Three (3) Circuit Breakers Plus (2) Duplex Receptacles and (1) Single Locking Receptacle				
15	QO	PBPQOR4A100M215	PBPQOR5A100M215	PBPQOR5B100M215
15	QOB	PBPQOR4A100M215B	PBPQOR5A100M215B	PBPQOR5B100M215B
20	QO	PBPQOR4A100M220	PBPQOR5A100M220	PBPQOR5B100M220
20	QOB	PBPQOR4A100M220B	PBPQOR5A100M220B	PBPQOR5B100M220B
Type 3—Three (3) Circuit Breakers Plus (1) Duplex Receptacle and (2) Single Locking Receptacles				
15	QO	PBPQOR4A100M315	PBPQOR5A100M315	PBPQOR5B100M315
15	QOB	PBPQOR4A100M315B	PBPQOR5A100M315B	PBPQOR5B100M315B
20	QO	PBPQOR4A100M320	PBPQOR5A100M320	PBPQOR5B100M320
20	QOB	PBPQOR4A100M320B	PBPQOR5A100M320B	PBPQOR5B100M320B
Type 4—Three (3) Circuit Breakers and (3) Single Locking Receptacles				
15	QO	PBPQOR4A100M415	PBPQOR5A100M415	PBPQOR5B100M415
15	QOB	PBPQOR4A100M415B	PBPQOR5A100M415B	PBPQOR5B100M415B
20	QO	PBPQOR4A100M420	PBPQOR5A100M420	PBPQOR5B100M420
20	QOB	PBPQOR4A100M420B	PBPQOR5A100M420B	PBPQOR5B100M420B

[1] Additional circuit breakers include QO-GFI, QO-HID, QO-K, and QO-EPD. Other factory-assembled units are available using receptacles shown in Table 112 on page 141. Consult your local Schneider Electric representative.

© 1986–2018 Schneider Electric
All Rights Reserved

Table 108: QOU Units with Circuit Breakers, Drop Cords, and Connectors (240 V Max)

QOU Unit with Circuit Breaker
Weight: 15 lbs. (7.5 kg [1])

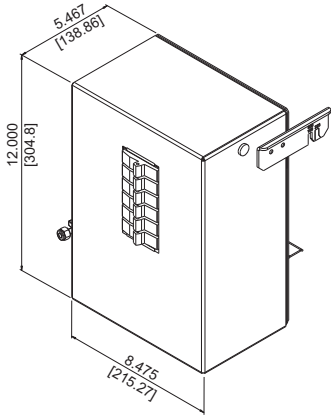

Circuit Breaker		NEMA Connector	Drop Cord Length (ft)	Catalog Number[2]		
Amps	Poles			4A	5A[3]	5B
One circuit breaker plus drop cord and connector						
15	1	L5-15	3	PBPQOU4A100COOL515	PBPQOU5A100COOL515	PBPQOU5B100COOL515
20	1	L5-20	3	PBPQOU4A100COOL520	PBPQOU5A100COOL520	PBPQOU5B100COOL520
30	1	L5-30	3	PBPQOU4A100COOL530	PBPQOU5A100COOL530	PBPQOU5B100COOL530
15	2	L6-15	3	PBPQOU4A100COOL615	PBPQOU5A100COOL615	PBPQOU5B100COOL615
20	2	L6-20	3	PBPQOU4A100COOL620	PBPQOU5A100COOL620	PBPQOU5B100COOL620
30	2	L6-30	3	PBPQOU4A100COOL630	PBPQOU5A100COOL630	PBPQOU5B100COOL630
20	3	L21-20	3	PBPQOU4A100COOL2120	PBPQOU5A100COOL2120	PBPQOU5B100COOL2120
30	3	L21-30	3	PBPQOU4A100COOL2130	PBPQOU5A100COOL2130	PBPQOU5B100COOL2130
15	1	L5-15	6	PBPQOU4A100FOOL515	PBPQOU5A100FOOL515	PBPQOU5B100FOOL515
20	1	L5-20	6	PBPQOU4A100FOOL520	PBPQOU5A100FOOL520	PBPQOU5B100FOOL520
30	1	L5-30	6	PBPQOU4A100FOOL530	PBPQOU5A100FOOL530	PBPQOU5B100FOOL530
15	2	L6-15	6	PBPQOU4A100FOOL615	PBPQOU5A100FOOL615	PBPQOU5B100FOOL615
20	2	L6-20	6	PBPQOU4A100FOOL620	PBPQOU5A100FOOL620	PBPQOU5B100FOOL620
30	2	L6-30	6	PBPQOU4A100FOOL630	PBPQOU5A100FOOL630	PBPQOU5B100FOOL630
20	3	L21-20	6	PBPQOU4A100FOOL2120	PBPQOU5A100FOOL2120	PBPQOU5B100FOOL2120
30	3	L21-30	6	PBPQOU4A100FOOL2130	PBPQOU5A100FOOL2130	PBPQOU5B100FOOL2130

1 Weight will vary based on the connector and length and number of drop cords.

2 Up to three drop cords can be ordered per device for 1-pole and 2-pole breakers. Up to two drop cords can be ordered for 3-pole breakers. Drop cord lengths range from 2 to 12 feet (.610 to 3.658 meters), and lengths can be combined in same device.

3 Drop cord ground terminals are connected to the IG and are marked accordingly.

QOU catalog numbers are for cover front units. Units are also available with door fronts (QOD).

Table 109: EDU Units with Circuit Breakers, 3 ft Drop Cords with NEMA Connectors (240 V Max), and PM5350 Meter

EDU Unit with Circuit Breaker and Meter
Weight: 18 lbs. (8 kg)

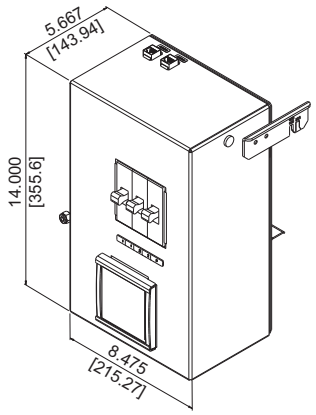

Circuit Breaker		NEMA Connector[1]	Drop Cord Length (ft)	Catalog Number[2]		
Amps	Poles			4A	5A[3]	5B
One ED circuit breaker, drop cord, connector and PM5350 meter (208Y/120 V)						
15	1	L5-15	3	PBPEDU4A100COOL515M1	PBPEDU5A100COOL515M1	PBPEDU5B100COOL515M1
20	1	L5-20	3	PBPEDU4A100COOL520M1	PBPEDU5A100COOL520M1	PBPEDU5B100COOL520M1
30	1	L5-30	3	PBPEDU4A100COOL530M1	PBPEDU5A100COOL530M1	PBPEDU5B100COOL530M1
15	2	L6-15	3	PBPEDU4A100COOL615M1	PBPEDU5A100COOL615M1	PBPEDU5B100COOL615M1
20	2	L6-20	3	PBPEDU4A100COOL620M1	PBPEDU5A100COOL620M1	PBPEDU5B100COOL620M1
30	2	L6-30	3	PBPEDU4A100COOL630M1	PBPEDU5A100COOL630M1	PBPEDU5B100COOL630M1
20	3	L15-20	3	PBPEDU4A100COOL1520M1	PBPEDU5A100COOL1520M1	PBPEDU5B100COOL1520M1
30	3	L15-30	3	PBPEDU4A100COOL1530M1	PBPEDU5A100COOL1530M1	PBPEDU5B100COOL1530M1
20	3	L21-20	3	PBPEDU4A100COOL2120M1	PBPEDU5A100COOL2120M1	PBPEDU5B100COOL2120M1
30	3	L21-30	3	PBPEDU4A100COOL2130M1	PBPEDU5A100COOL2130M1	PBPEDU5B100COOL2130M1

1 Other NEMA Connectors are available.

2 Up to three drop cords can be ordered per device for a 1-pole breaker. One drop cord is available for 2-pole and 3-pole breakers. Circuit breaker and drop cord positions are configurable. Based on system voltage of the busway, the catalog number meter suffix would change.

3 Drop cord ground terminals are connected to the IG and are marked accordingly.

© 1986–2018 Schneider Electric
All Rights Reserved

Table 110: EDU Units with Circuit Breakers, 3 ft Drop Cords with IEC Connectors (480Y/ 277 V Max.), and PM5350 Meter

Circuit Breaker		IEC 60309 Connector[1]	Drop Cord Length (ft)	Catalog Number[2]		
Amps	Poles			4A	5A[3]	5B
One (1) ED circuit breaker, drop cord, connector, and PM5350 Meter (480Y/277 V Max.)						
20	2	2-Pole, 3-Wire Grounding	3	PBPEDU4A100COOS3420M5	PBPEDU5A100COOS3420M5	PBPEDU5B100COOS3420M5
30	2	2-Pole, 3-Wire Grounding	3	PBPEDU4A100COOS3430M5	PBPEDU5A100COOS3430M5	PBPEDU5B100COOS3430M5
60	2	2-Pole, 3-Wire Grounding	3	PBPEDU4A100COOS3460M5	PBPEDU5A100COOS3460M5	PBPEDU5B100COOS3460M5
20	3	3-Pole, 4-Wire Grounding	3	PBPEDU4A100COOS4420M5	PBPEDU5A100COOS4420M5	PBPEDU5B100COOS4420M5
30	3	3-Pole, 4-Wire Grounding	3	PBPEDU4A100COOS4430M5	PBPEDU5A100COOS4430M5	PBPEDU5B100COOS4430M5
60	3	3-Pole, 4-Wire Grounding	3	PBPEDU4A100COOS4460M5	PBPEDU5A100COOS4460M5	PBPEDU5B100COOS4460M5
20	3	4-Pole, 5-Wire Grounding	3	PBPEDU4A100COOS5420M5	PBPEDU5A100COOS5420M5	PBPEDU5B100COOS5420M5
30	3	4-Pole, 5-Wire Grounding	3	PBPEDU4A100COOS5430M5	PBPEDU5A100COOS5430M5	PBPEDU5B100COOS5430M5
60	3	4-Pole, 5-Wire Grounding	3	PBPEDU4A100COOS5460M5	PBPEDU5A100COOS5460M5	PBPEDU5B100COOS5460M5

1 Other IEC Connectors are available.

2 Up to three drop cords can be ordered per device for a 1-pole breaker. One drop cord is available for 2-pole and 3-pole breakers. Circuit breaker and drop cord positions are configurable. Based on system voltage of the busway, the catalog number meter suffix would change.

3 Drop cord ground terminals are connected to the IG and are marked accordingly.

Gateway Unit

The gateway plug-in unit includes one integrated, web-based gateway-server that provides the ability to remotely monitor metered plug-in units through an Ethernet connection. For remote monitoring capabilities, a gateway is required (in the feed unit or in a plug-in unit). Units with metering can be daisy-chained together via modbus back to a gateway. Modbus and ethernet ports are available on the enclosure for the integration of metered plug-in units into any power monitoring and control system. A maximum of 32 units should be modbus daisy-chained together to one gateway unit.

Table 111: Gateway Unit

Gateway Unit Weight: 15 lbs. (7.5 kg)	Catalog Number				
	3A	4B	4A	5A	5B
	PBPEGX3A100T	PBPEGX4B100T	PBPEGX4A100T	PBPEGX5A100T	PBPEGX5B100T

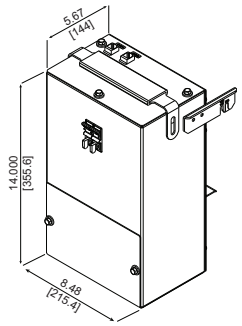

Table 112: NEMA Receptacles (R) and Connectors (C)

Non-Locking Devices

Wiring	Voltage	15 A	20 A
2-Pole, 3-Wire, Grounding	120	5-15	5-20
2-Pole, 3-Wire, Grounding	240	6-15	6-20
3-Pole, 3-Wire, Grounding	120 / 240	14-15	14-20
3-Pole, 3-Wire, Grounding	3Ø 240	15-15	15-20

Locking Devices

Wiring	Voltage	15 A	20 A	30 A
2-Pole, 3-Wire, Grounding	120	L5-15	L5-20	L5-30
2-Pole, 3-Wire, Grounding	240	L6-15	L6-20	L6-30
3-Pole, 4-Wire, Grounding	120 / 240	—	L14-20	L14-30
3-Pole, 4-Wire, Grounding	3Ø 240	—	L15-20	L15-30
4-Pole, 5-Wire, Grounding	3ØY 120 / 208	—	L21-20	L21-30

NOTES: QOR plug-in units have 1.82 in. x 2.82 in. (46 mm x 72 mm) openings for receptacle bodies and 3.28 in. (83 mm) spacing for #6-32 mounting holes. Additional NEMA connectors may be available. Contact your local Schneider Electric representative.

© 1986–2018 Schneider Electric
All Rights Reserved

Table 113: IEC 60309 Connectors[1]

Wiring	Voltage	20 A	30 A	60 A
2-pole, 3-wire, Grounding	240	320C6	330C6	360C6
	415	320C9	330C9	360C9
3-pole, 4-wire, Grounding	3Ø 240	420C9	430C9	460C9
	3Ø 415	420C6	430C6	460C6
4-pole, 5-wire Grounding	3ØY 120 / 208	520C9	530C9	560C9
	3ØY 415 / 240	520C6	530C6	560C6
	3ØY 480 / 277	520C7	530C7	560C7

1 Additional connectors may be available. Consult your local Schneider Electric representative.

Plug-In Unit Accessories

IP54 Kit (Water-Tight Boot for Circuit Breaker Opening)

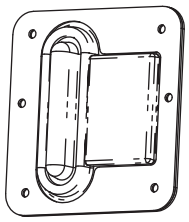

Catalog Number:
FA Unit = PBP54100FA
QO Unit = PBP54100QO

Floor Operator Attachment

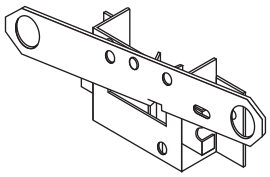

Catalog Number:
FA Unit = PBFO100FA
QO Unit = PBFO100QO

Plug-In Opening Cover

Catalog Number:
PBPIOCVR

Additional Accessories

Table 114: Additional Accessories

Description	Catalog Number
Reverse Feed Label Kit (FA unit only)	PBRFLKIT
Hookstick 8 ft (2.4 m)	515608
Hookstick 14 ft (4.3 m)	515614

© 1986–2018 Schneider Electric
All Rights Reserved