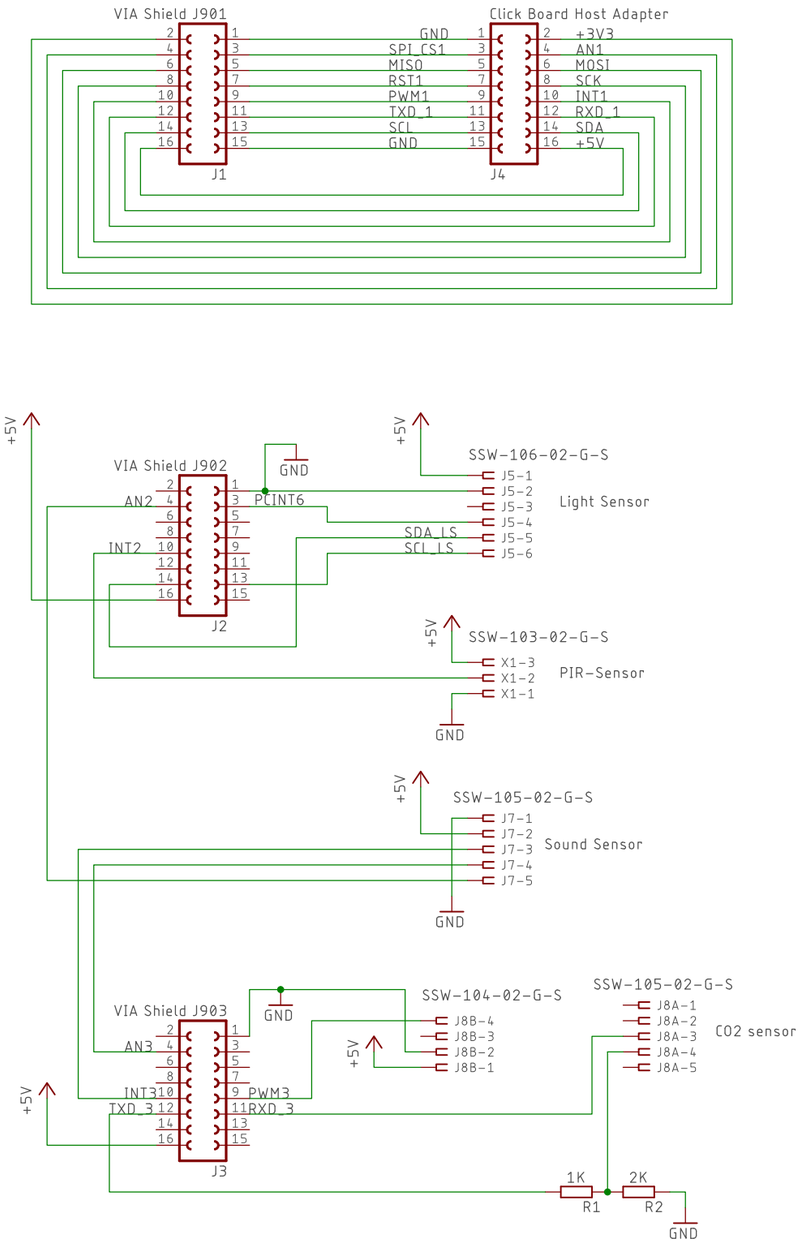

Sensor connection board

02/04/2019 15:35

Sheet: 1/1