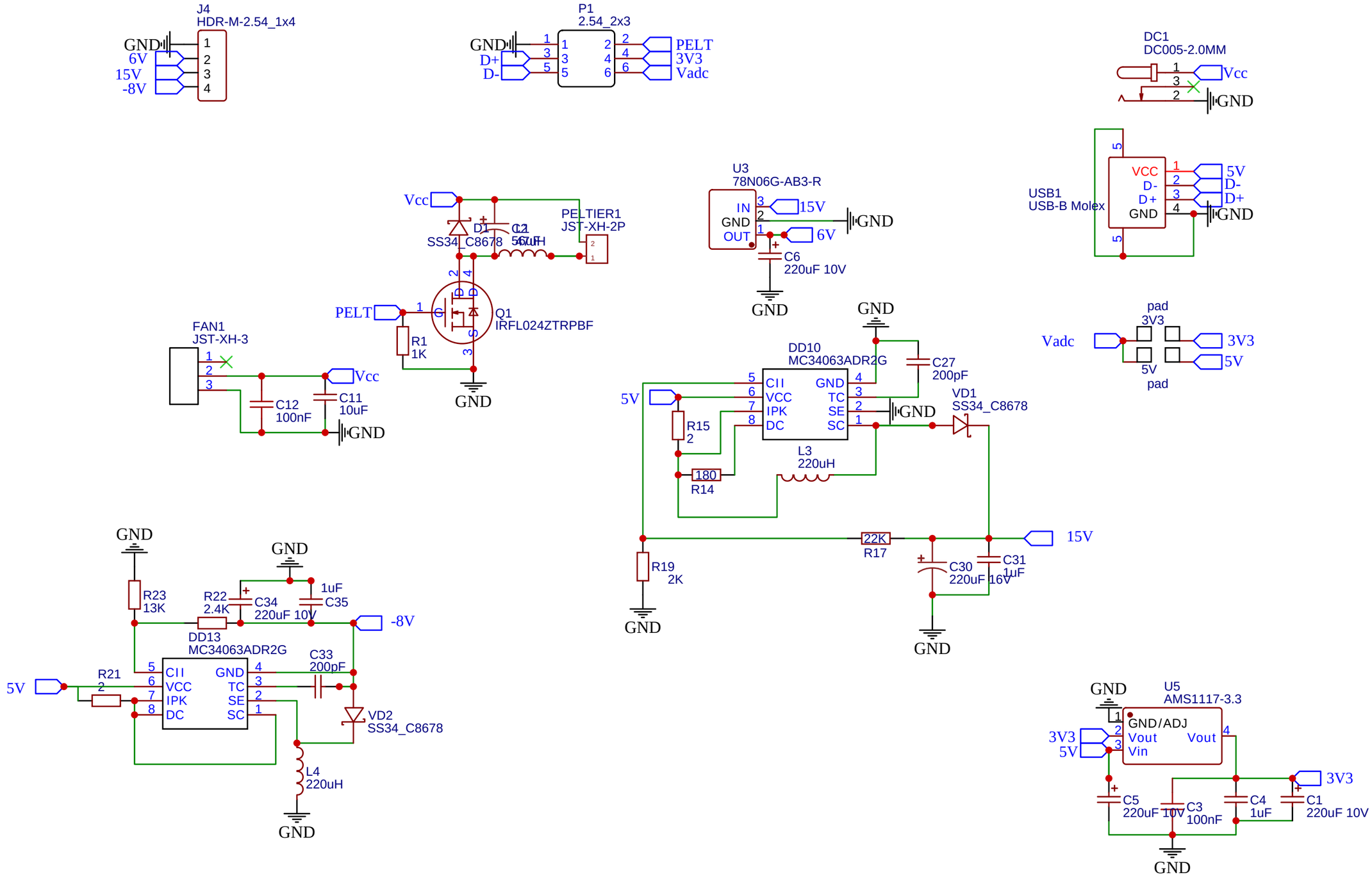

TITLE: Cam87 - Power board	REV: 1.0
EasyEDA — Company: zUrp Astronomics	Sheet: 1/1
Date: 2020-11-07 Drawn By: lordzurp	