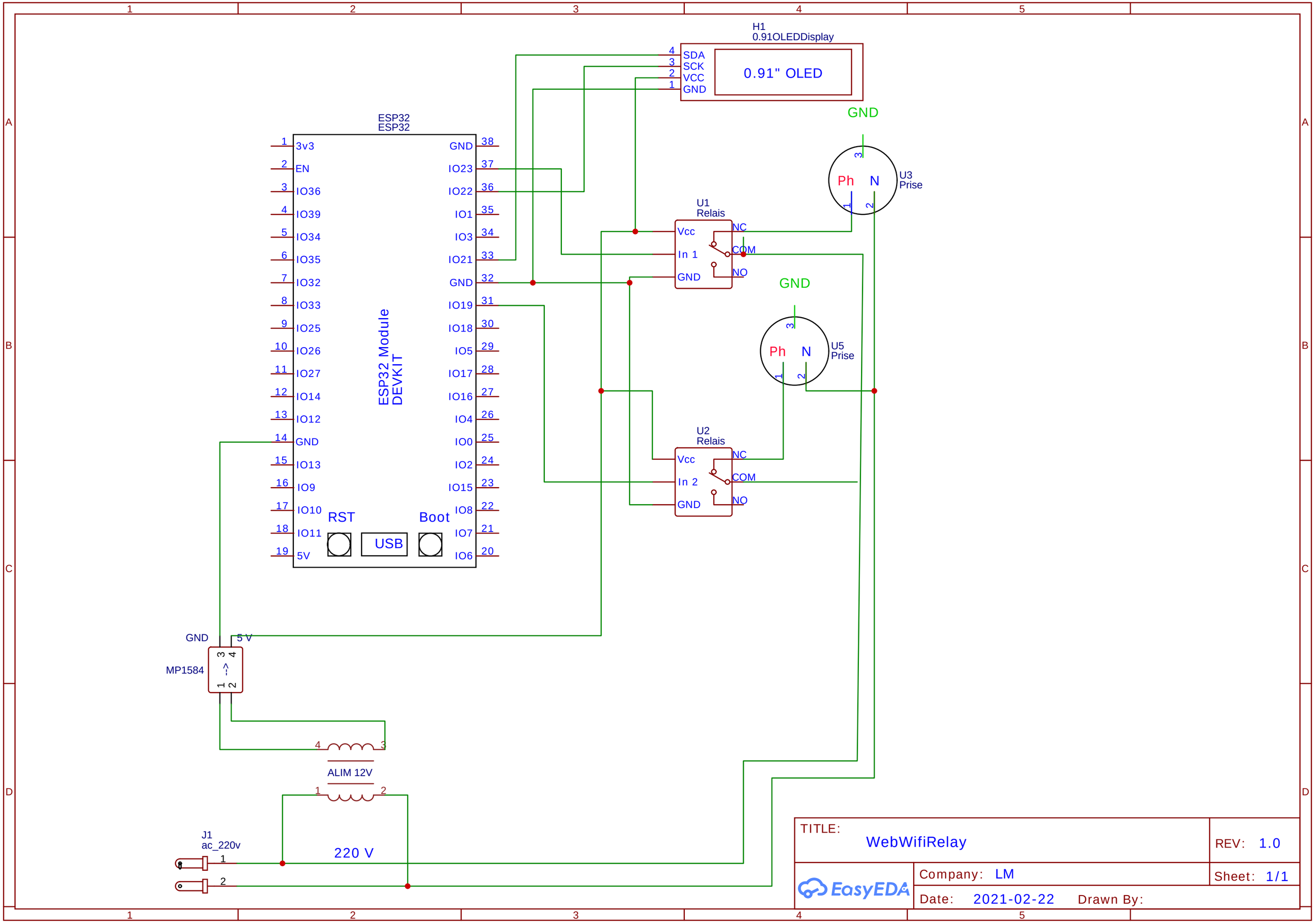

TITLE: WebWifiRelay

REV: 1.0

Company: LM

Sheet: 1/1

Date: 2021-02-22

Drawn By: