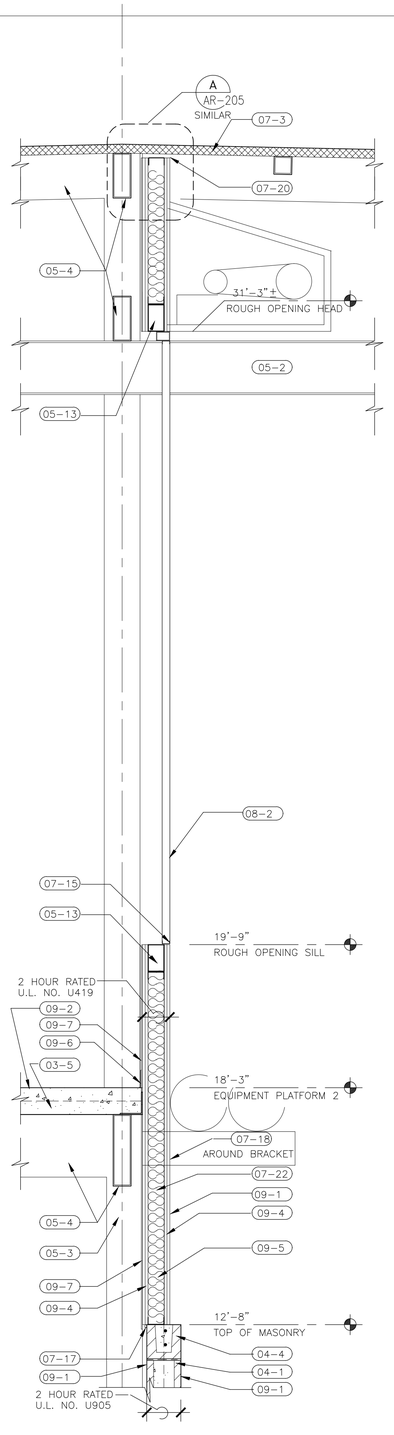

WALL SECTION 4 AR-205
SCALE: 3/4"=1'-0"

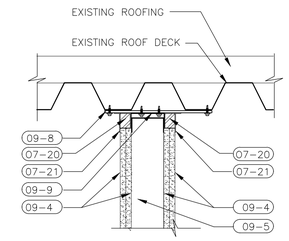

HEAD DETAIL SIMILAR TO HILTI HW-D-0106

HEAD DETAIL A AR-205
SCALE: 1 1/2"=1'-0"

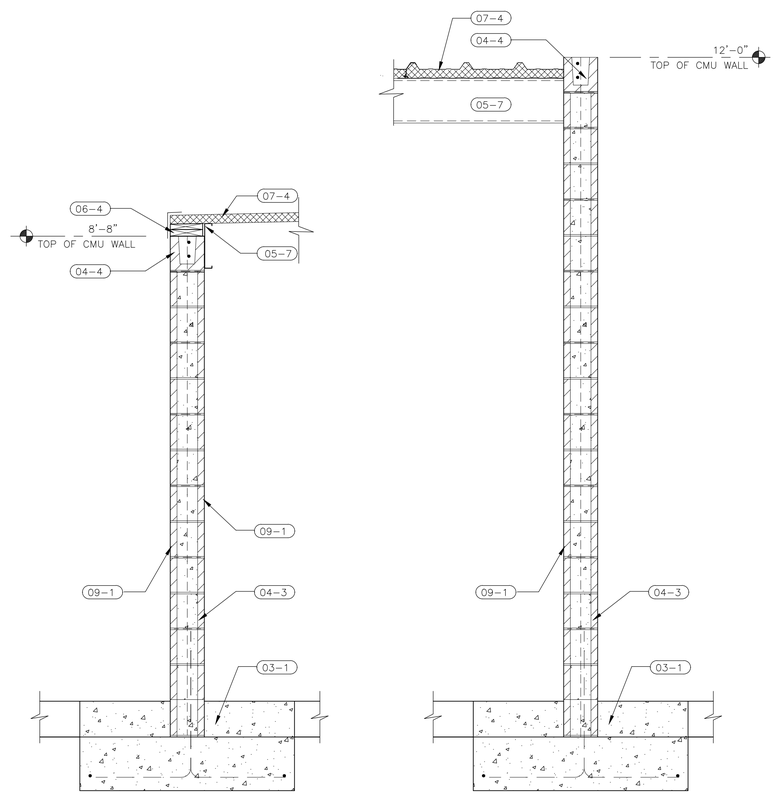

3

WALL SECTION 3 AR-205
SCALE: 3/4"=1'-0"

2

WALL SECTION 2 AR-205
SCALE: 3/4"=1'-0"

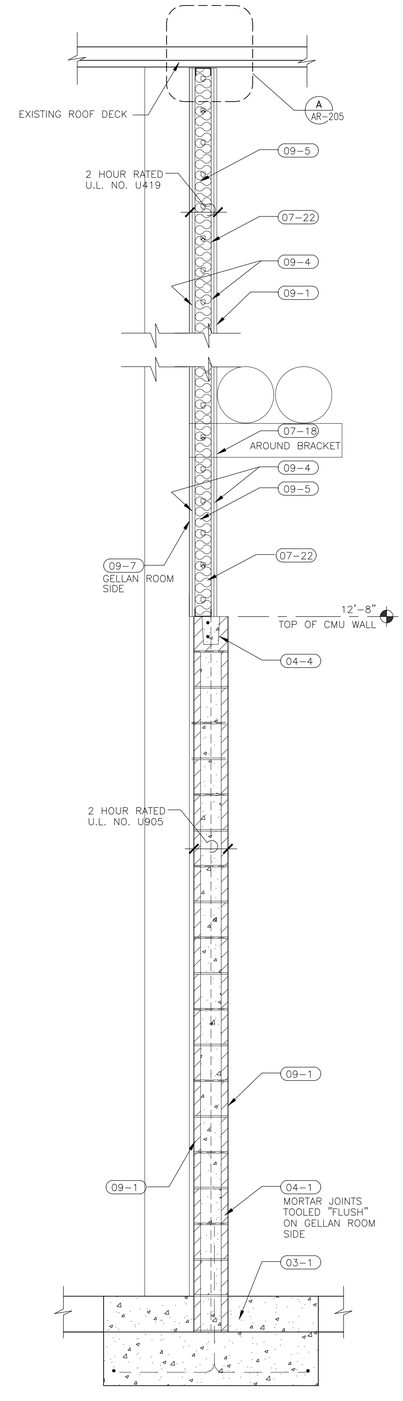

1

WALL SECTION 1 AR-205
SCALE: 3/4"=1'-0"

KEY NOTES

DIVISION 03 – CONCRETE

03-1 NEW CONCRETE FOOTING – SEE STRUCTURAL DRAWINGS
03-2 NEW 6" HIGH x 6" WIDE CONCRETE CURB WITH #5 TOP AND BOTTOM
03-3 NEW CONCRETE SUMP PUMP PIT
03-4 INFILL EXISTING 6" CONCRETE SLAB TO MEET AND MATCH EXISTING
03-5 NEW MEZZANINE CONCRETE SLAB – SEE STRUCTURAL DRAWINGS
03-6 NEW 4" HIGH CONCRETE EQUIPMENT PAD – SEE STRUCTURAL DRAWINGS

DIVISION 04 – MASONRY

04-1 NEW 8x8x16 CONCRETE BLOCK WITH #4 BARS AT 48" O.C. HORIZONTALLY AND JOINT REINFORCING AT 16" O.C. VERTICALLY (2 HOUR RATING)
04-2 INFILL EXISTING OPENING WITH NEW 8x8x16 CONCRETE BLOCK (2 HOUR RATING
04-3 NEW 8x8x16 CONCRETE BLOCK WITH #4 BARS AT 48" O.C. HORIZONTALLY AND JOINT REINFORCING AT 16" O.C. VERTICALLY
04-4 NEW BOND BEAM WITH (2) #5's CONTINUOUS

DIVISION 05 – METALS

05-1 NEW STEEL LINTEL – SEE STRUCTURAL DRAWINGS
05-2 NEW STEEL CRANE BEAM – SEE STRUCTURAL DRAWINGS
05-3 NEW STEEL COLUMN – SEE STRUCTURAL DRAWINGS
05-4 NEW STEEL BEAM – SEE STRUCTURAL DRAWINGS
05-5 NEW STEEL STAIR
05-5A NEW STEEL STRINGER
05-5B NEW STEEL GRATING (TREAD)
05-5C NEW STEEL HANDRAIL (1 1/2" SQUARE)
05-6 NEW REMOVABLE STEEL GUARDRAIL AT 42" ABOVE FIN. FLOOR
05-7 NEW METAL JOISTS – SEE STRUCTURAL DRAWINGS
05-8 STEEL GUARDRAIL AT 42" ABOVE FLOOR / TREAD
05-9 NEW TUBE STEEL GIRT – SEE STRUCTURAL DRAWINGS
05-10 METAL "Z" CHANNEL
05-11 NEW CHAIN RAILING AT 42" A.F.F. AND 32" A.F.F.
05-12 NEW STEEL ANGLE – SEE STRUCTURAL DRAWINGS
05-13 NEW METAL METAL FRAMING FOR DOOR – SEE STRUCTURAL DRAWINGS

DIVISION 06 – WOODS, PLASTICS, AND COMPOSITES

06-1 PRESSURE TREATED 2x12
06-2 PRESSURE TREATED 2x4
06-3 PRESSURE TREATED CANT
06-4 PRESSURE TREATED 2x WOOD BLOCKING

DIVISION 07 – THERMAL AND MOISTURE PROTECTION

07-1 INFILL EXISTING OPENING WITH NEW METAL WALL PANELS. PANEL PROFILE AND COLOR TO MATCH EXISTING
07-2 SEALANT
07-3 NEW INSULATED METAL ROOF PANELS
07-4 NEW INSULATED METAL WALL PANELS
07-5 NEW PRE-FINISHED METAL DOWNSPOUT
07-6 NEW PRE-FINISHED METAL GUTTER
07-7 NEW ROOFING MATERIAL, PATCH AND REPAIR TO MEET AND MATCH EXISTING
07-8 RAKE TRIM – BY METAL PANEL SUPPLIER
07-9 RAKE CLOSURE TRIM – BY METAL PANEL SUPPLIER
07-10 FOAM CLOSURE – PER MANUFACTURER'S RECOMMENDATIONS
07-11 FASTENERS – PER MANUFACTURER'S RECOMMENDATIONS
07-12 BASE FLASHING – BY METAL PANEL SUPPLIER
07-13 NEW RIGID INSULATION – PER MANUFACTURER'S RECOMMENDATIONS
07-14 METAL COUNTERFLASHING – PER MANUFACTURER'S RECOMMENDATIONS
07-15 MEMBRANE FLASHING – PER MANUFACTURER'S RECOMMENDATIONS
07-16 MEMBRANE ROOF – INSTALL PER MANUFACTURER'S RECOMMENDATIONS
07-17 BACKER ROD AND SEALANT
07-18 FIRESTOPPING
07-19 PRE-FINISHED METAL SILL FLASHING
07-20 FORMING MATERIAL
07-21 SPRAY ON FIRE PROOFING
07-22 NEW VINYL FACED BATT INSULATION
07-23 NEW PRE-FINISHED METAL LINER PANELS
07-24 NEW METAL BASE ANGLE
07-25 FLASH, PATCH, AND REPAIR EXISTING ROOF PENETRATION WITH NEW ROOF MEMBRANE PER ROOF MANUFACTURER'S RECOMMENDATIONS

DIVISION 08 – OPENINGS

08-1 NEW HOLLOW METAL DOOR AND FRAME
08-2 NEW 2 HOUR RATED MONORAIL DOOR

DIVISION 09 – FINISHES

09-1 PAINT
09-2 EPOXY FLOORING
09-3 NEW SUSPENDED CEILING SYSTEM (WASHABLE)
09-4 NEW 5/8" FIRE RATED DRYWALL
09-5 NEW 3 5/8" 20 GA. METAL STUDS AT 16" O.C.
09-6 EPOXY COVE BASE – SEE AR-202
09-7 FIBER REINFORCED WALL PANELS (FRP)
09-8 4" FLAT STRAP
09-9 RECEPTOR CHANNEL
09-10 FRP EDGE TRIM MOLDING
09-11 BULKHEAD WITH FRP OVER DRYWALL
09-12 NEW METAL FRAMING
09-13 NEW METAL HAT CHANNEL

DIVISION 10 – SPECIALTIES

10-1 NEW FIRE EXTINGUISHER AND BRACKET

DIVISION 21 – FIRE SUPPRESSION

21-1 RE-WORK EXISTING WET SPRINKLER SYSTEM TO PROVIDE COVERAGE. SPRINKLER DESIGN AND CONSTRUCTION TO BE PROVIDED BY A LICENSED FIRE SUPPRESSION PROFESSIONAL IN THE STATE OF OKLAHOMA.

DIVISION 22 – PLUMBING

22-1 NEW TRENCH DRAIN AND GRATING
22-2 NEW SUMP PUMP
22-3 NEW F.D.
22-4 NEW DRAIN PIPE

DIVISION 23 – HEATING, VENTILATION AND AIR CONDITIONING

23-1 RELOCATE EXISTING EXHAUST FAN – SEE MECHANICAL PLANS

Jedson. Engineering
4490 Halls Mill Road
Mobile, AL 36693
Phone: 251.621.2023
Fax: 251.626.0979
jedson.com

REV.	DATE	REVISION	DRWN BY	CHKD. BY	REV.	DATE	REVISION	DRWN BY	CHKD. BY
	2/9/16	ISSUED FOR BID			–	—	–	–	–
	1/5/16	ISSUED FOR REVIEW							

SCALE: AS NOTED
DRAWN BY: DLR — DATE: 12/28/2015
CHKD BY: — — DATE: —
APPD BY: — DATE: —

CPKelco
CPKELCO – OKMULGEE, OK.
GELLAN ROOM REMODEL
WALL TYPES / DETAILS

APPROPRIATION
FILE –
AR-205
A REV.