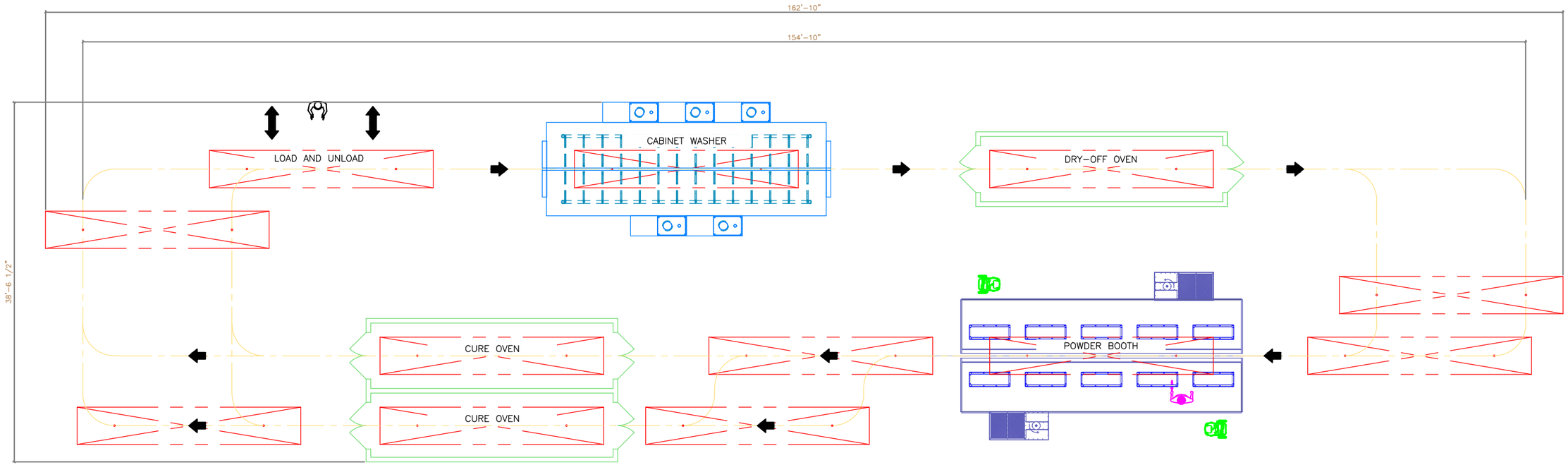

SYSTEM PLAN VIEW

SCALE: 3/16" = 1'-0"

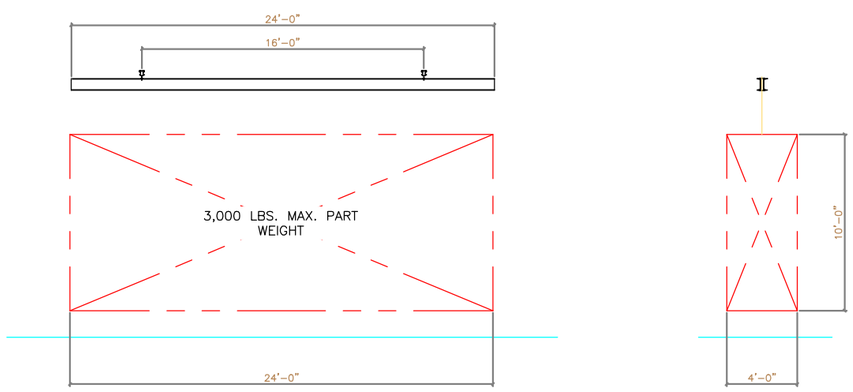

PART ELEVATION VIEWS

SCALE: 1/4" = 1'-0"

TTX STURGEON BAY, WI. 54235	SCALE AS NOTED	DRAWN BY	CHECKED BY	PROJECT ENG.	DATE 02/08/17	SHT 1 OF
	THERMA-TRON-X, INC.				CHARGE NO.	
	SYSTEM LAYOUT				DRAWING NO. L17002	

NOTICE: THIS PRINT, INCLUDING THE PRINCIPLE OF DESIGN, IS THE PROPERTY OF AND SUBMITTED BY THERMA-TRON-X, INC. WITH THE UNDERSTANDING THAT IT MAY NOT BE USED FOR ANY PURPOSE WITHOUT WRITTEN CONSENT FROM THERMA-TRON-X, INC.