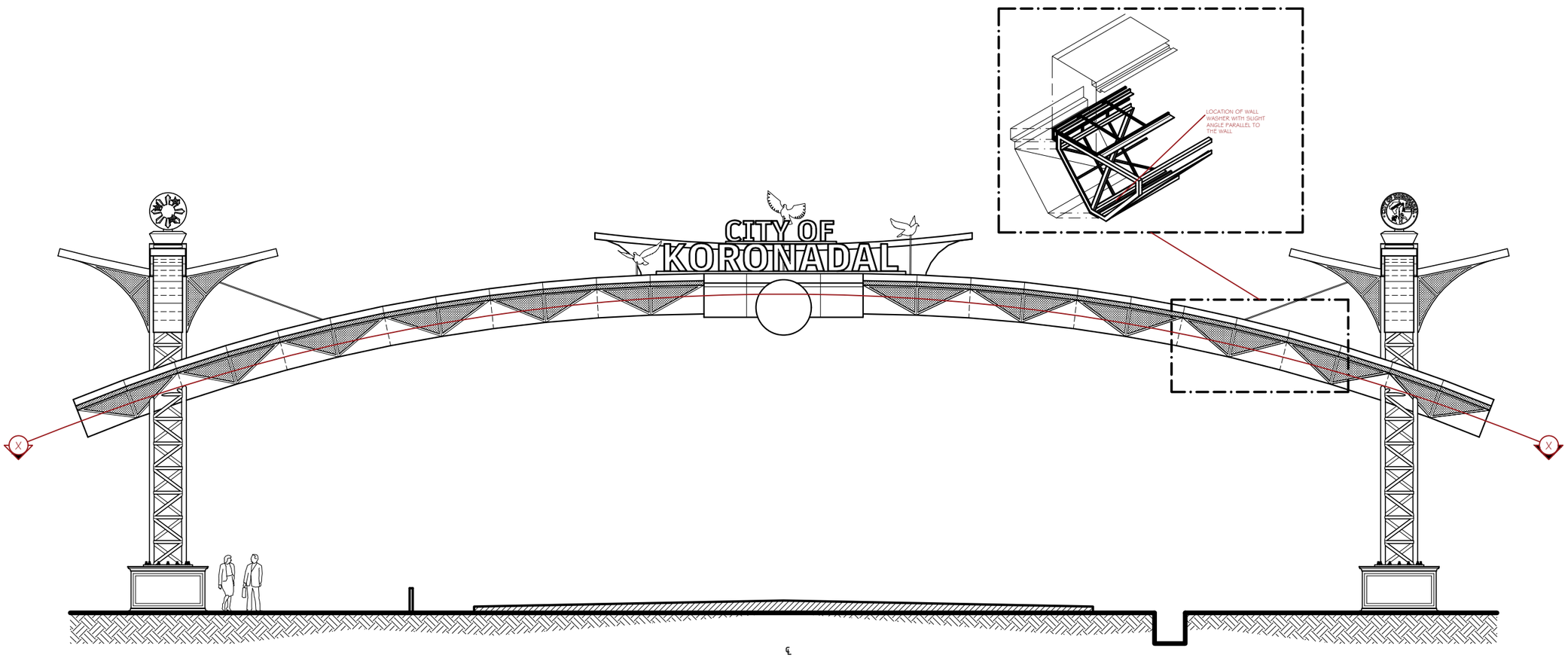

E 1 / 1 2 FRONT SIDE ELEVATION
SCALE 1 : 150 MTS.

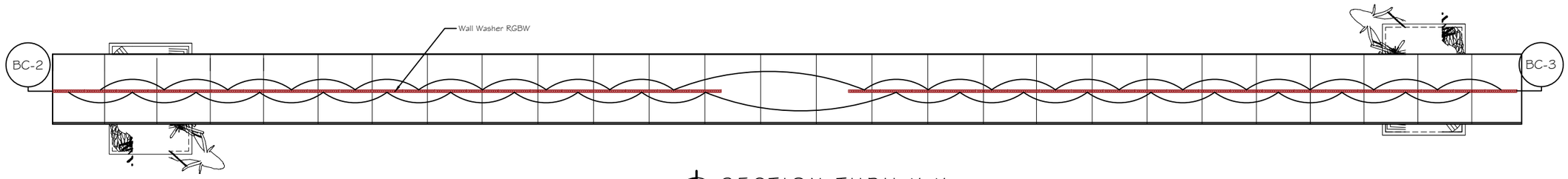

A 1 / 2 2 SECTION THRU X-X
SCALE 1 : 150 MTS.

PREPARED BY:		CHECKED BY:	REVIEWED BY:	PROJECT TITLE, LOCATION:	RECOMMENDING APPROVAL	APPROVED BY:	SHEET NO.:	
ENGR. SEVERINO JOHNROME E. USERO	ENGR. JAKE BUENAVISTA	EDDIE M. RODEROS, JR.	JOHN JOVI Z. ANGOR	CONSTRUCTION OF WELCOME ARCH AT BRGY. PARAISO	ENGR. RUEL C. TIANCHON, MPA, REA, REB	ATTY. ELIORDO U. OGENA	E-01	
ENGINEER I	ENGINEER III	ENGINEER III	ENGINEER IV - OIC CHIEF, PDDD	BRGY. PARAISO, CITY OF KORONADAL	CITY ENGINEER	CITY MAYOR	01	04

REPUBLIC OF THE PHILIPPINES
PROVICE OF SOUTH COTABATO
CITY OF KORONADAL
CITY ENGINEERING OFFICE (CEO)

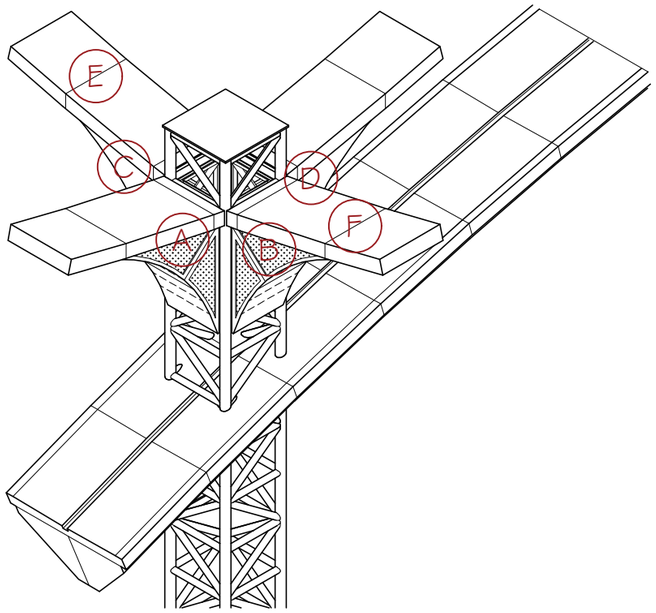

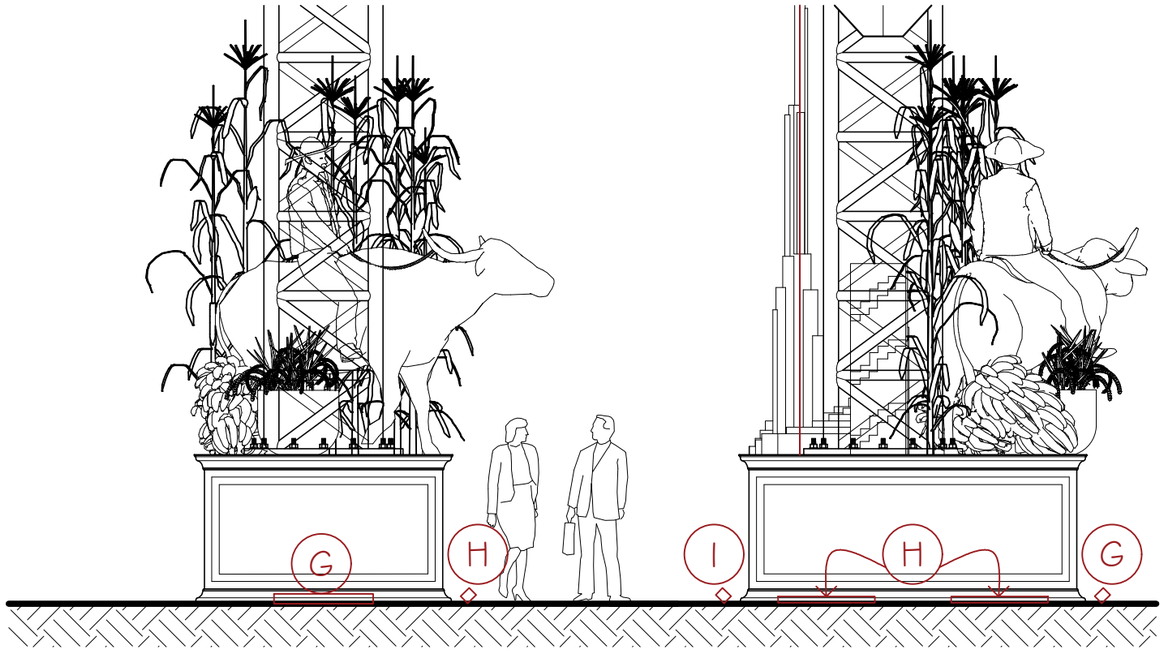

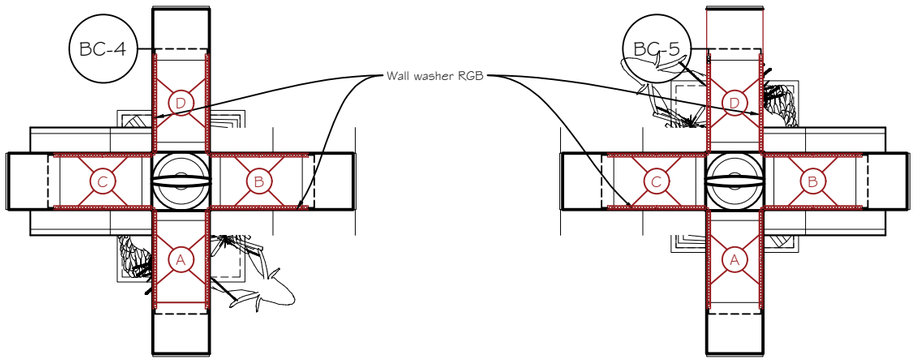

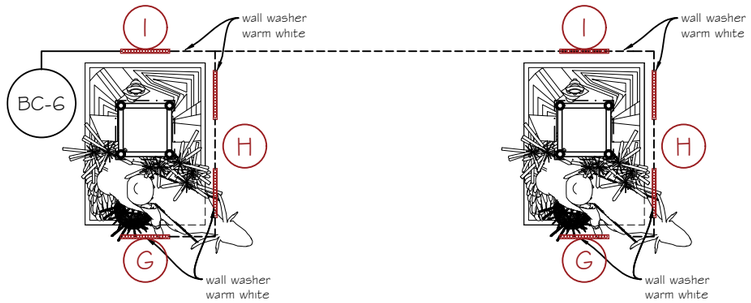

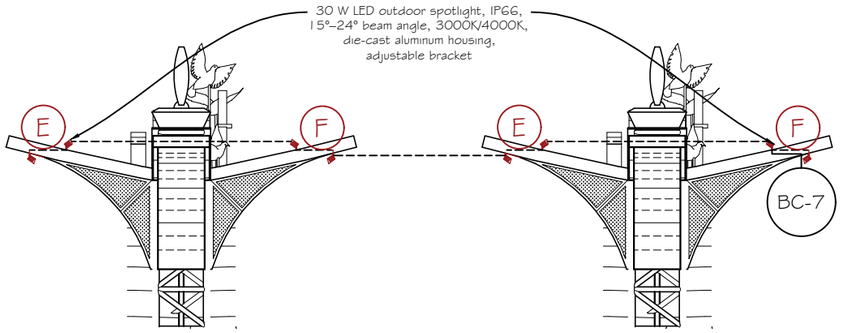

COLUMN AND PEDESTAL LIGHTING

E 2 / 1 1 SCALE NTS.

PREPARED BY:		CHECKED BY:	REVIEWED BY:	PROJECT TITLE, LOCATION:	RECOMMENDING APPROVAL	APPROVED BY:	SHEET NO.:	
ENGR. SEVERINO JOHNROME E. USERO	ENGR. JAKE BUENAVISTA	EDDIE M. RODEROS, JR.	JOHN JOVI Z. ANGOR	CONSTRUCTION OF WELCOME ARCH AT BRGY. PARAISO	ENGR. RUEL C. TIANCHON, MPA, REA, REB	ATTY. ELIORDO U. OGENA	E-02	
ENGINEER I	ENGINEER III	ENGINEER III	ENGINEER IV - OIC CHIEF, PDDD	BRGY. PARAISO, CITY OF KORONADAL	CITY ENGINEER	CITY MAYOR	02	04

REPUBLIC OF THE PHILIPPINES
PROVICE OF SOUTH COTABATO
CITY OF KORONADAL
CITY ENGINEERING OFFICE (CEO)

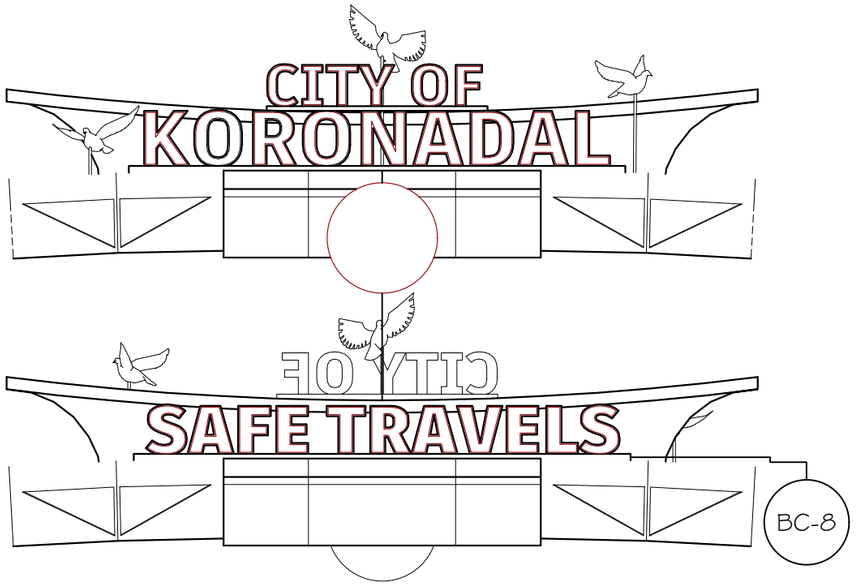

Parameter	Recommended Value
Type	12V DC or 24V DC LED strips / modules (waterproof IP65 if outdoors)
LED Density	60–120 LEDs/meter for uniform glow
Power	~4–8W/m for standard brightness; adjust based on letter size
Color Temp	4000–6000K (cool white) for bright visibility; RGB optional
Driver	Constant voltage LED driver, properly rated for total wattage
Diffuser	Frosted acrylic or silicone cover to avoid hotspots

Installation:

1. Keep LED strips evenly spaced behind letters for uniform halo glow.
2. Use aluminum channels to hold LED strips; acts as heat sink.
3. Ensure proper IP rating if outdoors (IP65 minimum).
4. Wiring: Route inside pylon/support column or through concealed conduit.

E3 / 1 3 SIGNAGE LIGHTING LAYOUT
SCALE NTS.

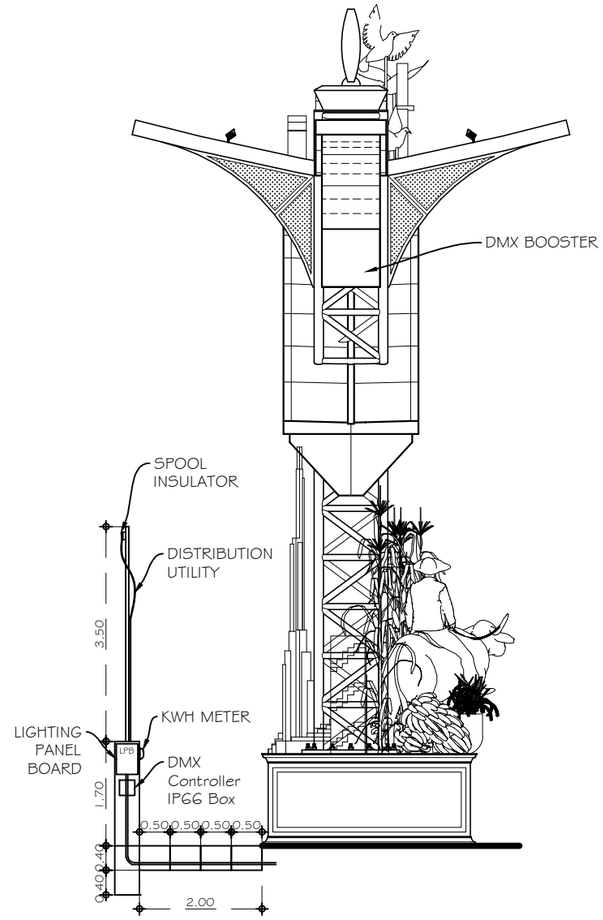

E3 / 2 3 ELECTRICAL/ELECTRONICS POLE, BREAKERS AND CONTROLLERS
SCALE NTS.

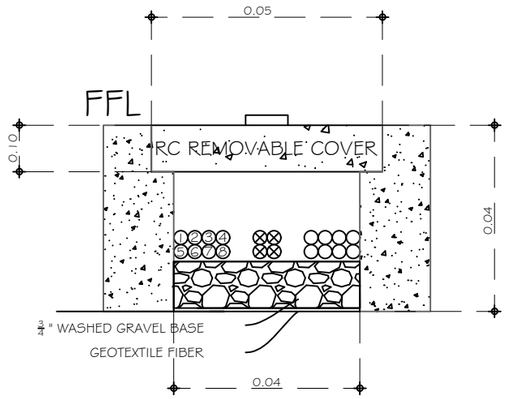

E3 / 3 3 TRENCH DETAILS
SCALE: 1:300

PREPARED BY:		CHECKED BY:	REVIEWED BY:	PROJECT TITLE, LOCATION:	RECOMMENDING APPROVAL	APPROVED BY:	SHEET NO.:	
ENGR. SEVERINO JOHNROME E. USERO	ENGR. JAKE BUENAVISTA	EDDIE M. RODEROS, JR.	JOHN JOVI Z. ANGOR	CONSTRUCTION OF WELCOME ARCH AT BRGY. PARAISO	ENGR. RUEL C. TIANCHON, MPA, REA, REB	ATTY. ELIORDO U. OGENA	E-03	
ENGINEER I	ENGINEER III	ENGINEER III	ENGINEER IV - OIC CHIEF, PDDD	BRGY. PARAISO, CITY OF KORONADAL	CITY ENGINEER	CITY MAYOR	03	04

REPUBLIC OF THE PHILIPPINES
PROVICE OF SOUTH COTABATO
CITY OF KORONADAL
CITY ENGINEERING OFFICE (CEO)

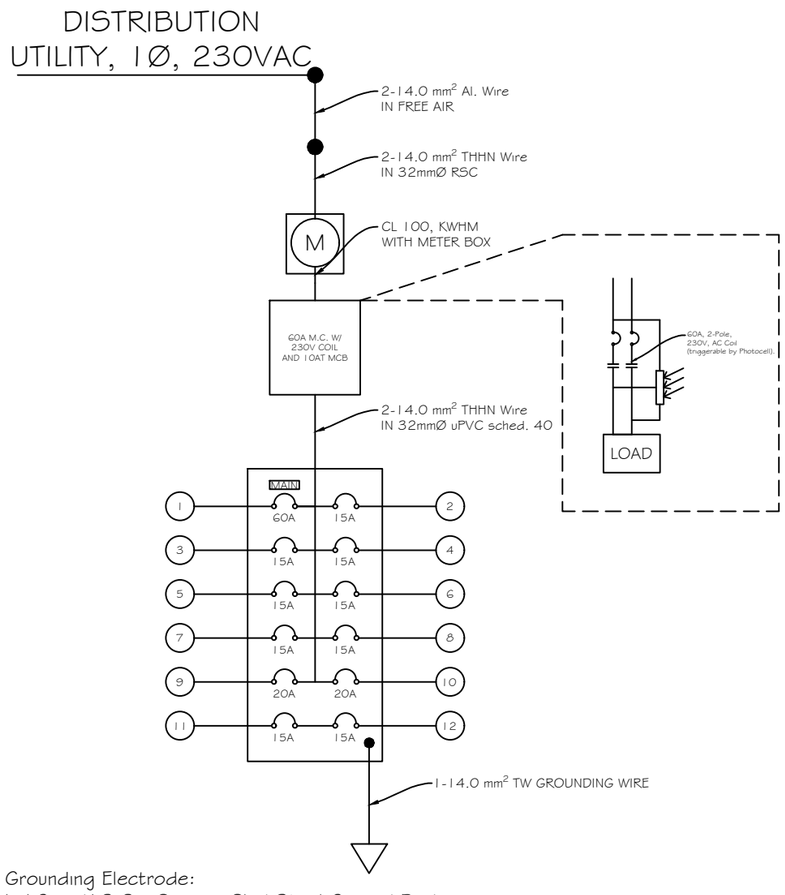

Grounding Electrode:
1-16mm X 3.0m Copper-Clad Steel Ground Rod
Bonding Jumper: 14.0 mm² Bare Copper Wire
Connection: Use a Mechanical Ground Lug bolted to the steel base of the arch
(ensure the steel is polished to bare metal at the contact point)
and connect it to the ground rod by heavy-duty clamp.

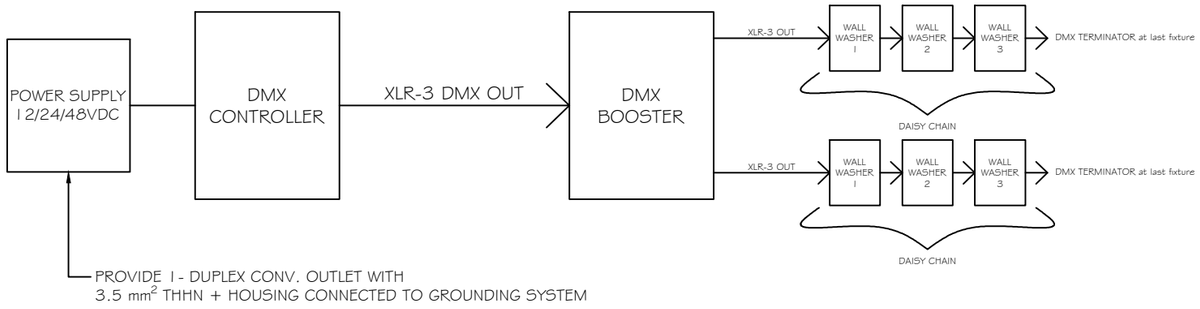

SCHEDULE OF LOADS

NO.	CIRCUIT CODE		LOAD DESCRIPTION	QTY	UNIT	WATTS PER UNIT	TOTAL WATTS	CURRENT SINGLE Ø L-G	CIRCUIT PROTECTION AT	AF	POLE	FREQ.	VOLTS	TYPE	KAIC	CONDUCTOR (CU) 2 - THHN (mm²)	1 - TW(G) (mm²)	RACEWAY SIZE (mmØ)	TYPE OF MATERIAL
1	MAIN		**USE: MAIN FEEDER WIRE AND OVERCURRENT PROTECTIVE DEVICE**				**8,180**	**35.57**	**60**	**100**	**2**	**60**	**230**	**MCCB**	**10**	**14.0 al.**		**DUPLEX IN FREE AIR**	
																14.0 cu.	**5.5 cu.**	**32.0**	**RMC**
																14.0 cu.	**5.5 cu.**	**32.0**	**uPVC**
2	BC-2	WW	LIGHTING OUTLET	20	Pieces	50	1000	4.35	15	50	2	60	230	MCB	10	2.0	2.0	20.0	uPVC
3	BC-3	WW	LIGHTING OUTLET	20	Pieces	50	1000	4.35	15	50	2	60	230	MCB	10	2.0	2.0	20.0	uPVC
4	BC-4	WW	LIGHTING OUTLET	16	Pieces	50	800	3.48	15	50	2	60	230	MCB	10	2.0	2.0	20.0	uPVC
5	BC-5	WW	LIGHTING OUTLET	16	Pieces	50	800	3.48	15	50	2	60	230	MCB	10	2.0	2.0	20.0	uPVC
6	BC-6	WW	LIGHTING OUTLET	4	Pieces	50	200	0.87	15	50	2	60	230	MCB	10	2.0	2.0	20.0	uPVC
		WW	LIGHTING OUTLET	4	Pieces	50	200	0.87								2.0	2.0	20.0	uPVC
7	BC-7	SL	LIGHTING OUTLET	4	Pieces	25	100	0.43	15	50	2	60	230	MCB	10	2.0	2.0	20.0	uPVC
		SL	LIGHTING OUTLET	4	Pieces	25	100	0.43								2.0	2.0	20.0	uPVC
8	BC-8	LOGO	LIGHTING OUTLET	1	Pieces	500	500	2.17	15	50	2	60	230	MCB	10	2.0	2.0	20.0	uPVC
		LOGO	LIGHTING OUTLET	1	Pieces	500	500	2.17	15	50	2	60	230	MCB	10	2.0	2.0	20.0	uPVC
		LOGO	LIGHTING OUTLET	1	Pieces	500	500	2.17	15	50	2	60	230	MCB	10	2.0	2.0	20.0	uPVC
9	BC-9	DMX CON	CONVENIENCE OUTLET	1	Pieces	180	180	0.78	20	50	2	60	230	MCB	10	2.0	2.0	25.0	uPVC
10	BC-10	SPARE	SPARE	1	Pieces	300	300	1.30	20	50	2	60	230	MCB	10	3.5	2.0	25.0	uPVC
11	BC-11	SPARE	SPARE	1	Pieces	1000	1000	4.35	15	50	2	60	230	MCB	10	2.0	2.0	20.0	uPVC
12	BC-12	SPARE	SPARE	1	Pieces	1000	1000	4.35	15	50	2	60	230	MCB	10	2.0	2.0	20.0	uPVC

GENERAL NOTES (ELECTRICAL)

1. CODES AND STANDARDS

- All electrical works shall be done in accordance with the latest edition of the **Philippine Electrical Code (PEC)**, the National Building Code, and the requirements of the Local Utility Provider and the City of Koronadal.
- All materials to be used shall be brand new and of the approved type for the specific location and purpose.
- The contractor shall verify all dimensions and actual site conditions before the start of work.

2. POWER SERVICE AND DISTRIBUTION

- **Main Service Entrance:** 2 - 14.0 mm² THWN Copper Wire in 32mm Ø (1-1/4") Rigid Steel Conduit (RSC).
- **Main Protection:** (1) 60 AT, 100 AF, 2-Pole, 230V AC Molded Case Circuit Breaker (MCCB).
- **Panel Board:** 12-Branch, 2-Pole NEMA 3R enclosure. Centerline height shall be **1.5 meters** from the Finished Floor Line (FFL).

3. LIGHTING AND AUTOMATION

- **Magnetic Contactor:** Lighting loads shall be controlled by a **60A, 2-Pole Magnetic Contactor** with 230V AC Coil, housed in a weatherproof enclosure.
- **Photocell Sensor:** Provide (1) 230V AC outdoor-rated photocell (IP65) for automatic dusk-to-dawn operation.
- **Arch Lighting:** 24-50W Linear LED Wall Washers (IP66) shall be installed end-to-end along the bottom apex chord, pointing upward.

4. DMX DATA SYSTEM

- **Wiring:** Use **Shielded Twisted Pair (STP)** 120-ohm DMX cable for all data connections.
- **Conduit:** Data cables must be run in a **dedicated 20mmØ PVC conduit**, separate from AC power lines to prevent signal interference.
- **Booster:** DMX Booster/Splitter at the arch midpoint to ensure signal reliability for the full 40-meter run or more.

5. GROUNDING AND BONDING

- **Grounding Rod:** 16mmØ x 3.0m Copper-Clad Steel Ground Rod.
- **Structural Bonding:** The steel arch frame and all electrical enclosures shall be bonded to the ground system using **8.0mm² bare copper wire**.
- **Connections:** Use mechanical grounding lugs bolted to a cleaned, unpainted metal surface to ensure electrical continuity.

6. SAFETY AND HEALTH

- The contractor shall strictly follow **DOLE Occupational Safety and Health Standards**.
- All workers must wear proper **Personal Protective Equipment (PPE)**, including hard hats, safety shoes, and high-visibility vests.
- Use a full-body safety harness with double-lanyard when working on the truss structure.
- Observe strict Lock-Out/Tag-Out (LOTO) procedures during electrical termination and maintenance.

REPUBLIC OF THE PHILIPPINES
PROVICE OF SOUTH COTABATO
CITY OF KORONADAL
CITY ENGINEERING OFFICE (CEO)

PREPARED BY:		CHECKED BY:	REVIEWED BY:	PROJECT TITLE, LOCATION:	RECOMMENDING APPROVAL	APPROVED BY:	SHEET NO.:
ENGR. SEVERINO JOHNROME E. USERO	ENGR. JAKE BUENAVISTA	EDDIE M. RODEROS, JR.	JOHN JOVI Z. ANGOR	CONSTRUCTION OF WELCOME ARCH AT BRGY. PARAISO	ENGR. RUEL C. TIANCHON, MPA, REA, REB	ATTY. ELIORDO U. OGENA	E-04
ENGINEER I	ENGINEER III	ENGINEER III	ENGINEER IV - OIC CHIEF, PDDD	BRGY. PARAISO, CITY OF KORONADAL	CITY ENGINEER	CITY MAYOR	04 / 04