ADC/Disti Technical Summit, December 7th - 9th , 2016

Repeater Mode Introduction

QUALCOMM
2016-12-19 19:00:29 PST
quanhai.zhang@arrowasia.com

Qualcomm Technologies, Inc.

80-YA117-7 Rev. A

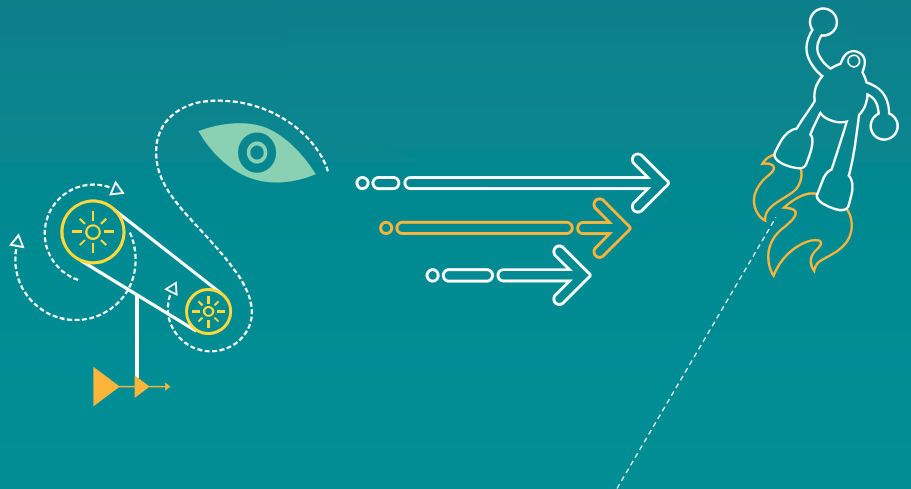

Confidential and Proprietary – Qualcomm Technologies, Inc.

NO PUBLIC DISCLOSURE PERMITTED: Please report postings of this document on public servers or websites to: DocCtrlAgent@qualcomm.com.

Restricted Distribution: Not to be distributed to anyone who is not an employee of either Qualcomm Technologies, Inc. or its affiliated companies without the express approval of Qualcomm Configuration Management.

QUALCOMM®
2016-12-19 19:00:29 PST
quanhai.zhang@arrowasia.com

Confidential and Proprietary – Qualcomm Technologies, Inc.

NO PUBLIC DISCLOSURE PERMITTED: Please report postings of this document on public servers or websites to: DocCtrlAgent@qualcomm.com.

Restricted Distribution: Not to be distributed to anyone who is not an employee of either Qualcomm Technologies, Inc. or its affiliated companies without the express approval of Qualcomm Configuration Management.

Not to be used, copied, reproduced, or modified in whole or in part, nor its contents revealed in any manner to others without the express written permission of Qualcomm Technologies, Inc.

Qualcomm is a trademark of Qualcomm Incorporated, registered in the United States and other countries. Other product and brand names may be trademarks or registered trademarks of their respective owners.

This technical data may be subject to U.S. and international export, re-export, or transfer (“export”) laws. Diversion contrary to U.S. and international law is strictly prohibited.

Qualcomm Technologies, Inc.
5775 Morehouse Drive
San Diego, CA 92121
U.S.A.

© 2016 Qualcomm Technologies, Inc. and/or its affiliated companies. All rights reserved.

Revision History

Revision	Date	Description
A	November 2016	Initial release

QUALCOMM®
2016-12-19 19:00:29 PST
quanhai.zhang@arrowasia.com

Agenda

Repeater Modes 5

- WDS Mode 6
- EXTAP Mode 9
- QWRAP Mode 12

DBDC Repeater 19

TBDC Repeater 27

QUALCOMM®
2016-12-19 19:00:29 PST
quanhai.zhang@arrowasia.com

Repeater Modes

QUALCOMM
2016-12-19 19:00:29 PST
quanhai.zhang@arrowasia.com

WDS Mode

QUALCOMM
2016-12-19 19:00:29 PST
quanhai.zhang@arrowasia.com

WDS Introduction

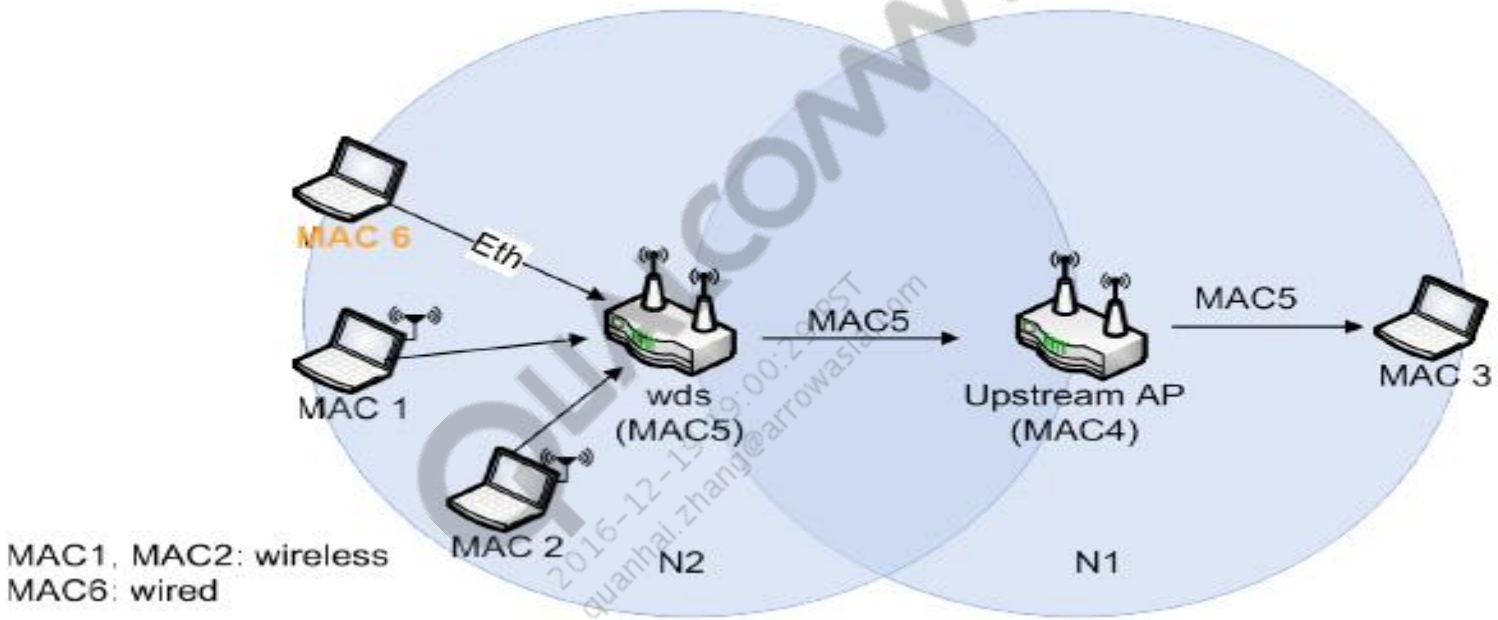

- Communication between WDS and upstream AP adopts four-address frame format.
- WDS forwards all data frames from the wireless/wired interface to the device connected to the upstream AP and vice versa.
- The upstream AP to which the Client-AP is connected should understand a four-address frame.

WDS Settings

- AP - DUT
- wifi detect > /etc/config/wireless
- uci commit wireless
- uci revert -P /var/state wireless
- wifi
- uci delete wireless.@wifi-iface[1]
- uci delete wireless.@wifi-iface[0]
- uci add wireless wifi-iface
- uci add wireless wifi-iface
- uci set wireless.@wifi-iface[0].network=lan
- uci set wireless.@wifi-iface[0].wds=1
- uci set wireless.@wifi-iface[0].ssid=UCI2G
- uci set wireless.@wifi-iface[0].encryption=none
- uci set wireless.@wifi-iface[0].device=wifi0
- uci set wireless.@wifi-iface[0].nss=2
- uci set wireless.@wifi-iface[0].mode=ap
- usi set wireless.@wifi-iface[0].disablecoext='1'
- uci set wireless.@wifi-iface[1].network=lan
- uci set wireless.@wifi-iface[1].mode=ap
- uci set wireless.@wifi-iface[1].wds=1
- uci set wireless.@wifi-iface[1].ssid=UCI5G
- uci set wireless.@wifi-iface[1].encryption=none
- uci set wireless.@wifi-iface[1].device=wifi1
- uci set wireless.@wifi-iface[1].nss=2
- uci set wireless.@wifi-device[0].hwmode=11ng
- uci set wireless.@wifi-device[0].disabled=0
- uci set wireless.@wifi-device[0].htmode=HT40
- uci set wireless.@wifi-device[0].channel=6
- uci set wireless.@wifi-device[0].txchainmask=3
- uci set wireless.@wifi-device[0].rxchainmask=3
- uci set wireless.@wifi-device[1].hwmode=11ac
- uci set wireless.@wifi-device[1].disabled=0
- uci set wireless.@wifi-device[1].htmode=VHT80
- uci set wireless.@wifi-device[1].channel=149
- uci set wireless.@wifi-device[1].txchainmask=3
- uci set wireless.@wifi-device[1].rxchainmask=3
- uci commit wireless
- wifi
- wifi detect > /etc/config/wireless
- uci commit wireless
- uci revert -P /var/state wireless
- wifi
- uci delete wireless.@wifi-iface[1]
- uci delete wireless.@wifi-iface[0]
- uci add wireless wifi-iface
- uci set wireless.@wifi-device[0].hwmode=11ng
- uci set wireless.@wifi-iface[0].network=lan
- uci set wireless.@wifi-iface[0].mode=sta
- uci set wireless.@wifi-iface[0].wds=1
- uci set wireless.@wifi-iface[0].ssid=UCI2G
- uci set wireless.@wifi-iface[0].encryption=none
- uci set wireless.@wifi-iface[0].device=wifi0
- uci set wireless.@wifi-iface[0].disablecoext='1'
- uci set wireless.@wifi-device[0].txchainmask=3
- uci set wireless.@wifi-device[0].rxchainmask=3
- uci set wireless.@wifi-device[0].htmode=HT40
- uci set wireless.@wifi-device[0].htmode=HT40
- uci set wireless.@wifi-device[0].disabled=0
- uci set wireless.@wifi-device[0].channel=6
- uci delete wireless.@wifi-iface[1]
- uci delete wireless.@wifi-iface[0]
- uci add wireless wifi-iface
- uci set wireless.@wifi-device[1].hwmode=11ac
- uci set wireless.@wifi-device[1].disabled=0
- uci set wireless.@wifi-device[1].txchainmask=3
- uci set wireless.@wifi-device[1].rxchainmask=3
- uci set wireless.@wifi-iface[0].mode=sta
- uci set wireless.@wifi-iface[0].wds=1
- uci set wireless.@wifi-iface[0].ssid=UCI5G
- uci set wireless.@wifi-iface[0].encryption=none
- uci set wireless.@wifi-iface[0].device=wifi1
- uci commit wireless
- wifi

QUALCOMM®
2019-12-19 19:00:29 PST
quanhaz@arrowasia.com

EXTAP Mode

QUALCOMM
2016-12-19 19:00:29 PST
quanhai.zhang@arrowasia.com

EXTAP Introduction

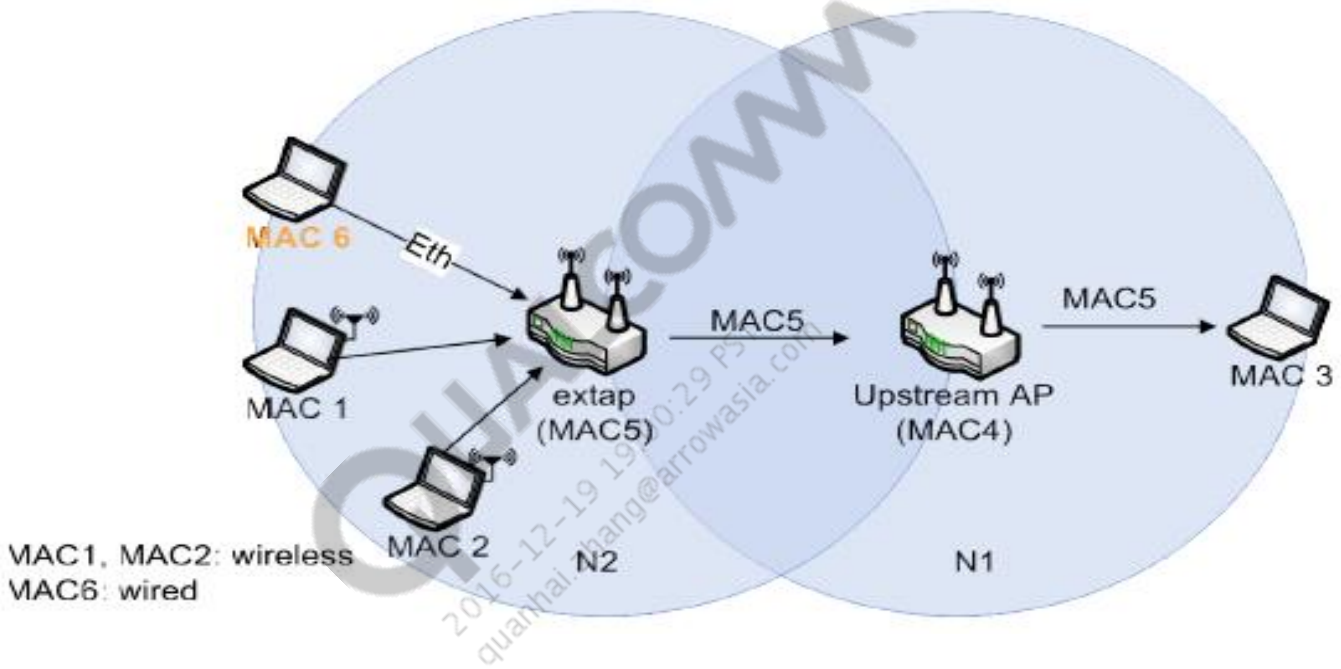

- Communication between EXTAP and upstream AP adopts three-address frame format.
- Extender-AP is a feature in AP, where AP acts as a station (Client-AP) and forwards all three-address data frames from the wireless interface to the device connected to the LAN and WAN port of the AP and vice versa. It allows EXTAP AP to connect with any legacy AP.
- AP operating in Extender-AP mode (Client-AP) should bridge the frames to the AP via wireless interface using the three-address format and vice versa. The frames are received from the end device which connected to the LAN/WAN port of the AP.

EXTAP Settings

- AP - DUT
- uci set wireless.@wifi-iface[0].network=lan
- uci set wireless.@wifi-iface[0].ssid=UCI2G
- uci set wireless.@wifi-iface[0].encryption=none
- uci set wireless.@wifi-iface[0].device=wifi0
- uci set wireless.@wifi-iface[0].mode=ap
- uci set wireless.@wifi-iface[1].network=lan
- uci set wireless.@wifi-iface[1].mode=ap
- uci set wireless.@wifi-iface[1].ssid=UCI5G
- uci set wireless.@wifi-iface[1].encryption=none
- uci set wireless.@wifi-iface[1].device=wifi1
- uci set wireless.@wifi-device[0].hwmode=11ng
- uci set wireless.@wifi-device[0].disabled=0
- uci set wireless.@wifi-device[0].htmode=HT40
- uci set wireless.@wifi-device[0].channel=6
- uci set wireless.@wifi-device[0].txchainmask=3
- uci set wireless.@wifi-device[0].rxchainmask=3
- uci set wireless.@wifi-device[1].hwmode=11ac
- uci set wireless.@wifi-device[1].disabled=0
- uci set wireless.@wifi-device[1].htmode=VHT80
- uci set wireless.@wifi-device[1].channel=149
- uci set wireless.@wifi-device[1].txchainmask=3
- uci set wireless.@wifi-device[1].rxchainmask=3
- uci commit wireless
- wifi

- uci set wireless.wifi0=wifi-device
- uci set wireless.wifi0.type=qcawifi
- uci set wireless.wifi0.hwmode=11ng
- uci set wireless.wifi0.htmode=HT40
- uci set wireless.wifi0.disabled=0
- uci set wireless.@wifi-iface[0]=wifi-iface
- uci set wireless.@wifi-iface[0].device=wifi0
- uci set wireless.@wifi-iface[0].network=lan
- uci set wireless.@wifi-iface[0].mode=ap
- uci set wireless.@wifi-iface[0].ssid=hb_extap
- uci add wireless wifi-iface
- uci set wireless.@wifi-iface[1]=wifi-iface
- uci set wireless.@wifi-iface[1].device=wifi0
- uci set wireless.@wifi-iface[1].network=lan
- uci set wireless.@wifi-iface[1].mode=sta
- uci set wireless.@wifi-iface[1].extap=1
- uci set wireless.@wifi-iface[1].ssid=UCI2G
- uci set wireless.wifi1=wifi-device
- uci set wireless.wifi1.type=qcawifi
- uci set wireless.wifi1.hwmode=11ac
- uci set wireless.wifi1.htmode=HT80
- uci set wireless.wifi1.disabled=0
- uci set wireless.@wifi-iface[2]=wifi-iface
- uci set wireless.@wifi-iface[2].device=wifi1
- uci set wireless.@wifi-iface[2].network=lan
- uci set wireless.@wifi-iface[2].mode=ap
- uci set wireless.@wifi-iface[2].ssid=besra_extap
- uci add wireless wifi-iface
- uci set wireless.@wifi-iface[3]=wifi-iface
- uci set wireless.@wifi-iface[3].device=wifi1
- uci set wireless.@wifi-iface[3].network=lan
- uci set wireless.@wifi-iface[3].mode=sta
- uci set wireless.@wifi-iface[3].extap=1
- uci set wireless.@wifi-iface[3].ssid=UCI5G
- uci commit wireless

QUALCOMM
2016-12-19 19:00:29 PST
quanhai.zhang@arrowsti.com

QWRAP Mode

QUALCOMM
2016-12-19 19:00:29 PST
quanhai.zhang@arrowasia.com

QWRAP

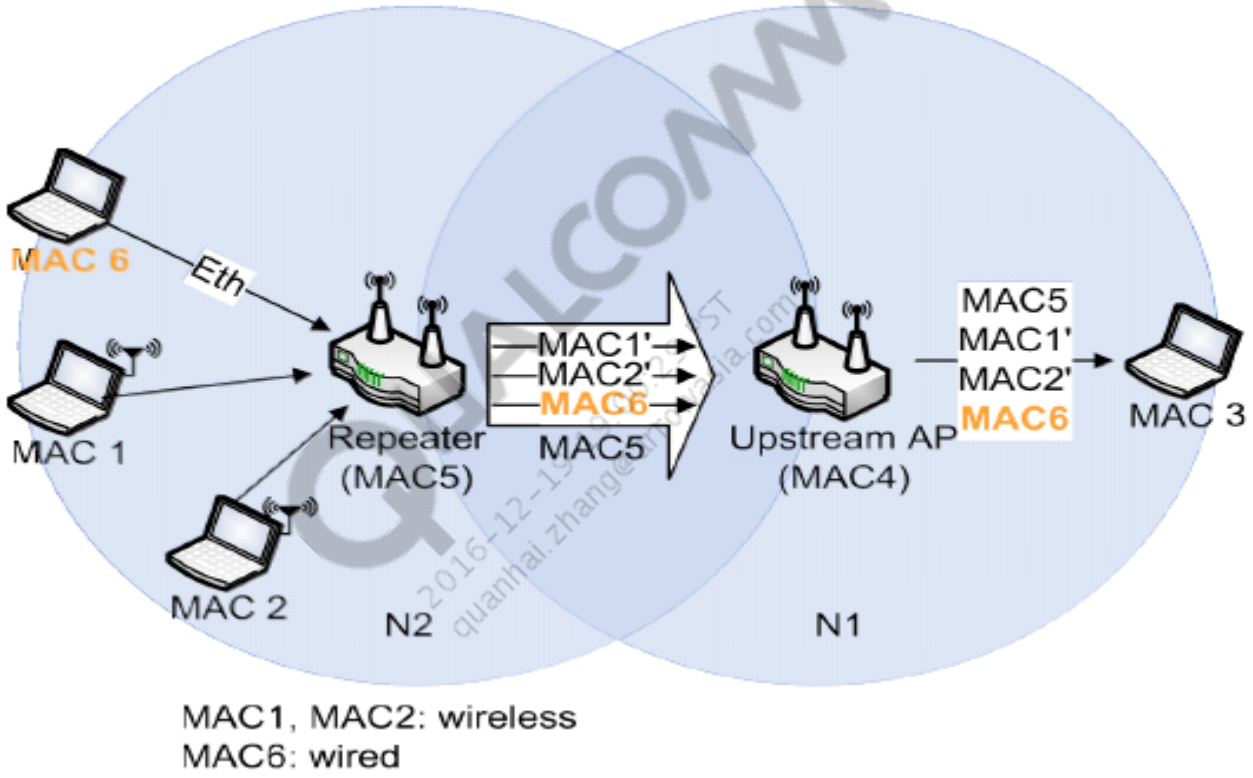

- Q-WRAP feature in a repeater AP enables the range extension for the network behind repeater. Repeater and upstream AP communication happens in 3-address frame format.
- STA1 and STA2 are wireless stations while PC is a wire station.

QWRAP Architecture

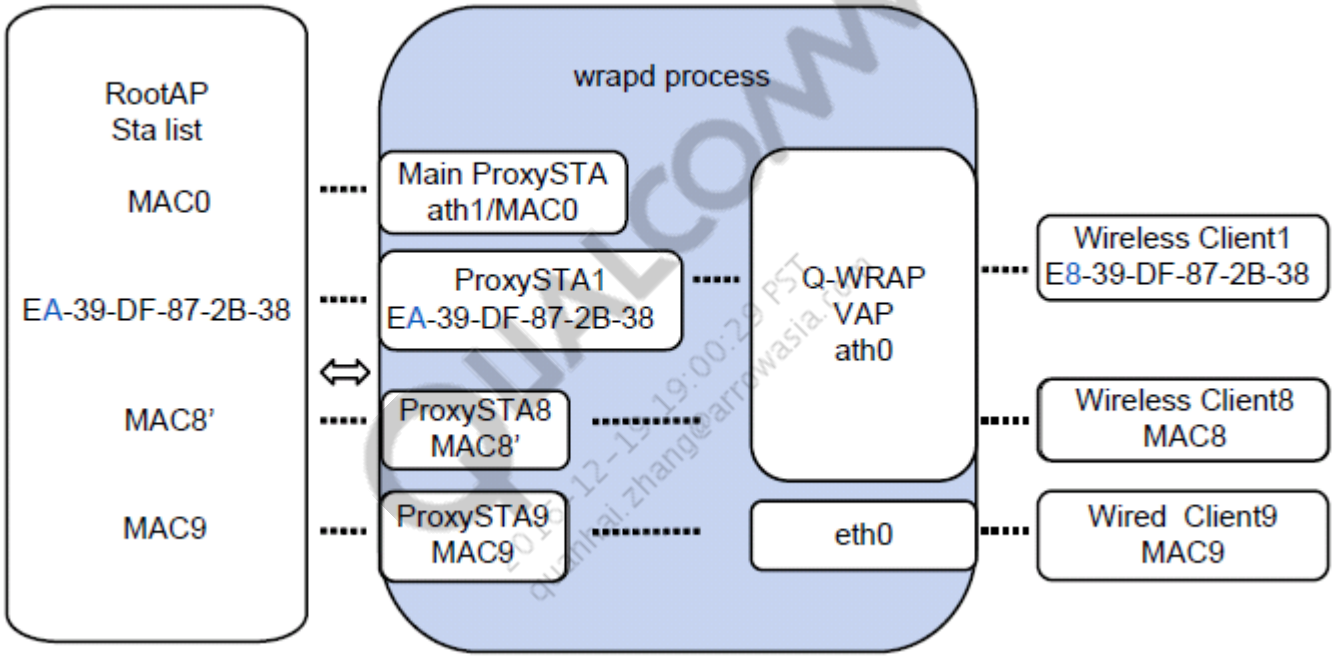

- WRAPD is a process that:
  - creates Proxy STAX automatically.
  - connects to Root AP after wireless ClientX connects to Q-WRAP VAP.

QWRAP L2 Bridge and Data Flow (1/2)

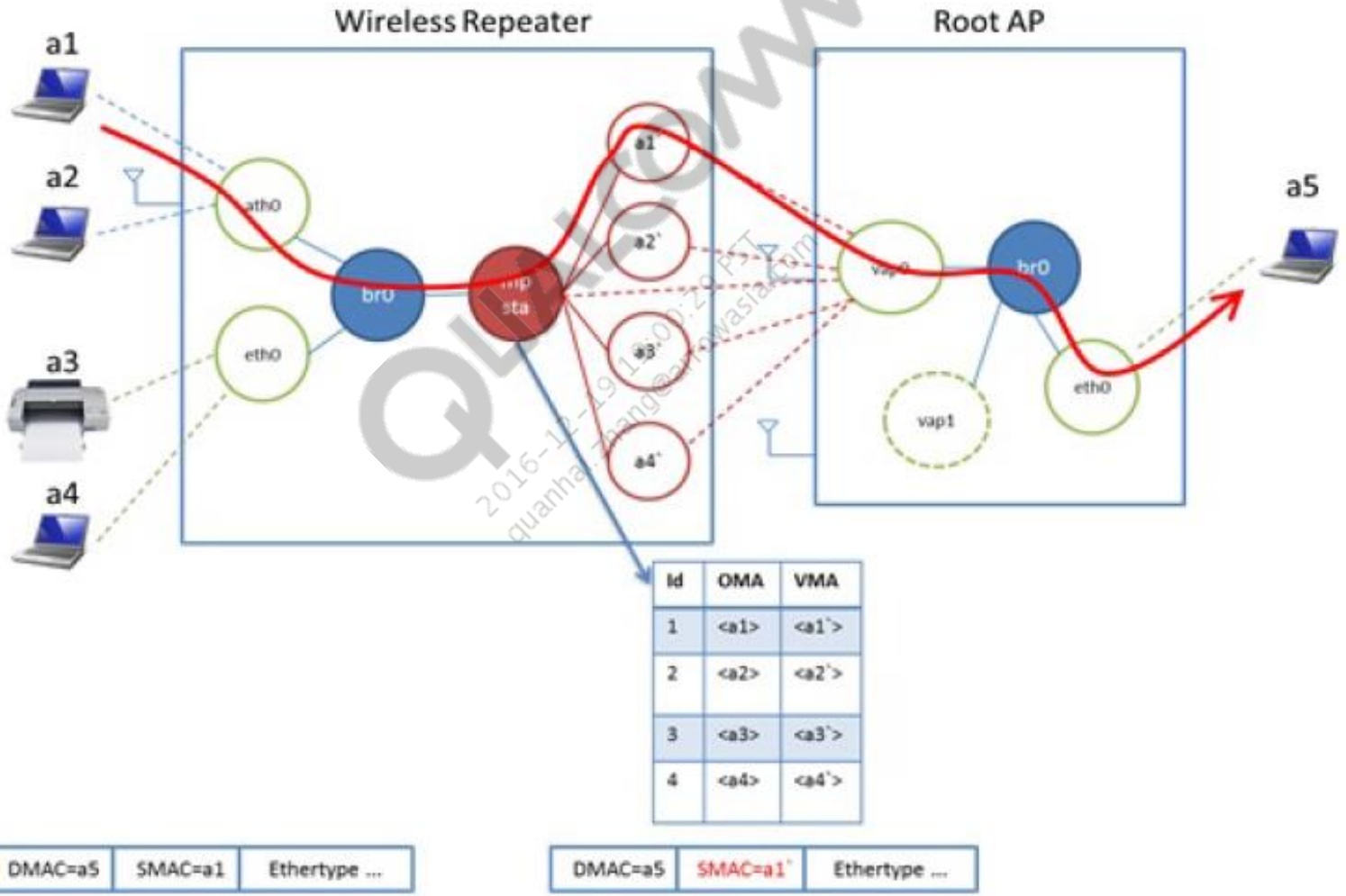

QWRAP L2 Bridge and Data Flow (2/2)

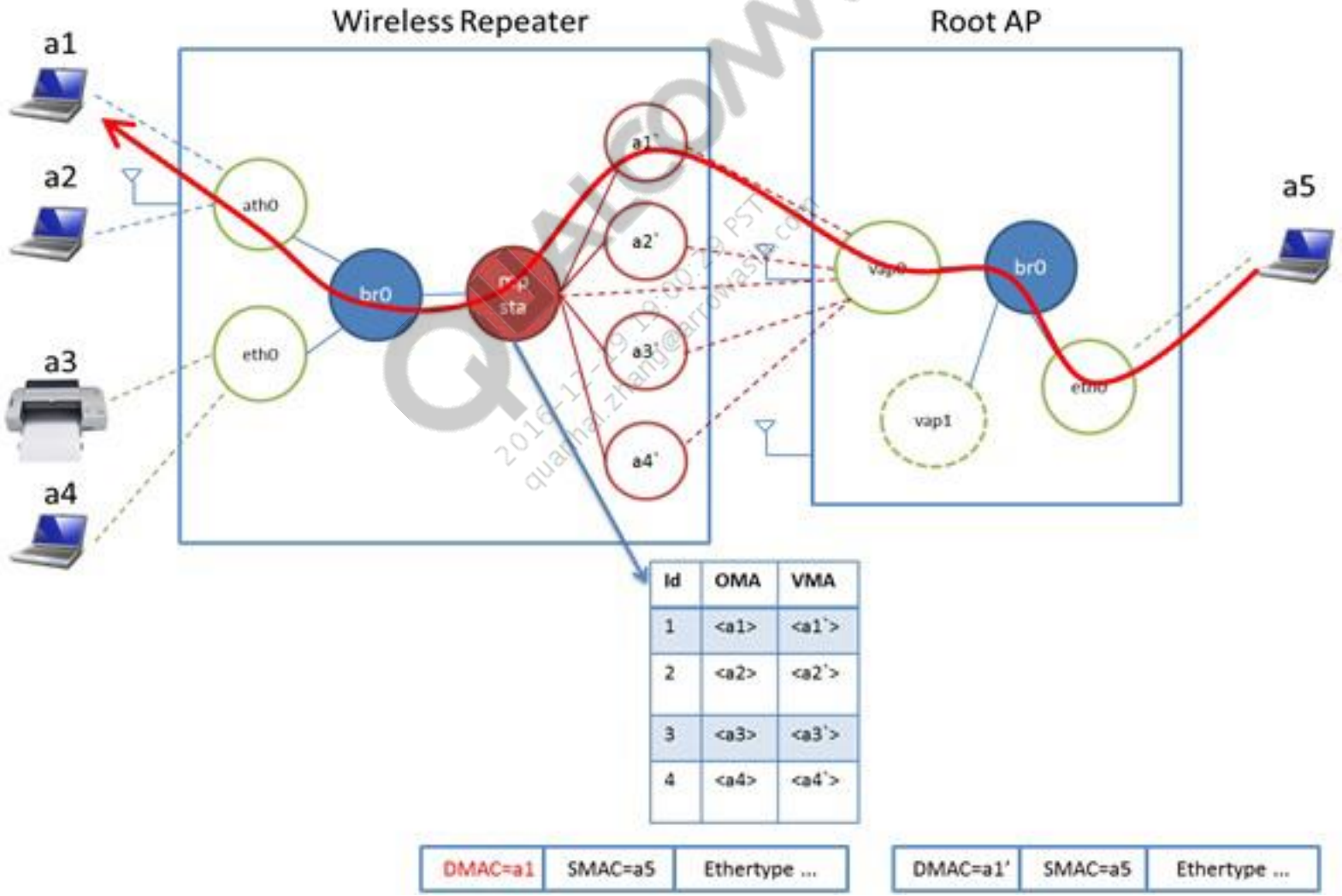

Qualcomm
2016-11-29 19:00:29 PST
quanhai.zhang@arrowasset.com

QWRAP Settings

- AP:
- uci set wireless.@wifi-iface[0].network=lan
- uci set wireless.@wifi-iface[0].ssid=UCI2G
- uci set wireless.@wifi-iface[0].encryption=none
- uci set wireless.@wifi-iface[0].device=wifi0
- uci set wireless.@wifi-iface[0].mode=ap
- uci set wireless.@wifi-iface[1].network=lan
- uci set wireless.@wifi-iface[1].mode=ap
- uci set wireless.@wifi-iface[1].ssid=UCI5G
- uci set wireless.@wifi-iface[1].encryption=none
- uci set wireless.@wifi-iface[1].device=wifi1
- uci set wireless.@wifi-device[0].hwmode=11ng
- uci set wireless.@wifi-device[0].disabled=0
- uci set wireless.@wifi-device[0].htmode=HT40
- uci set wireless.@wifi-device[0].channel=6
- uci set wireless.@wifi-device[0].txchainmask=3
- uci set wireless.@wifi-device[0].rxchainmask=3
- uci set wireless.@wifi-device[1].hwmode=11ac
- uci set wireless.@wifi-device[1].disabled=0
- uci set wireless.@wifi-device[1].htmode=VHT80
- uci set wireless.@wifi-device[1].channel=149
- uci set wireless.@wifi-device[1].txchainmask=3
- uci set wireless.@wifi-device[1].rxchainmask=3
- uci commit wireless
- wifi

- RE:
- uci set wireless.@wifi-device[0].hwmode=auto
- uci set wireless.@wifi-device[0].htmode=auto
- uci set wireless.@wifi-device[0].disabled=0
- uci set wireless.@wifi-device[0].channel=auto
- uci set wireless.@wifi-device[0].txchainmask=3
- uci set wireless.@wifi-device[0].rxchainmask=3
- uci set wireless.@wifi-device[0].macaddr='00:03:7f:02:20:11‘
- uci set wireless.@wifi-device[0].qwrap_enable='1‘
- uci set wireless.@wifi-device[0].qwrap_eth_sta_add_en=1
- uci set wireless.@wifi-iface[0].mode=wrap
- uci set wireless.@wifi-iface[0].network='lan‘
- uci set wireless.@wifi-iface[0].ssid=XXLINK_EXT_2G
- uci set wireless.@wifi-iface[0].device=wifi0
- uci set wireless.@wifi-iface[1].mode=sta
- uci set wireless.@wifi-iface[1].network='lan‘
- uci set wireless.@wifi-iface[1].ssid=rootap_2G
- uci set wireless.@wifi-iface[1].device=wifi0
- uci set wireless.@wifi-device[1].hwmode=auto
- uci set wireless.@wifi-device[1].htmode=auto
- uci set wireless.@wifi-device[1].disabled=0
- uci set wireless.@wifi-device[1].channel=auto
- uci set wireless.@wifi-device[1].macaddr='00:03:7f:02:10:11‘
- uci set wireless.@wifi-device[1].txchainmask=3
- uci set wireless.@wifi-device[1].rxchainmask=3
- uci set wireless.@wifi-device[1].qwrap_enable='1‘
- uci set wireless.@wifi-device[1].qwrap_eth_sta_add_en=1
- uci set wireless.@wifi-iface[2].mode=wrap
- uci set wireless.@wifi-iface[2].network=lan
- uci set wireless.@wifi-iface[2].ssid=XXLINK_EXT_5G
- uci set wireless.@wifi-iface[2].device=wifi1
- uci set wireless.@wifi-iface[3].mode=sta
- uci set wireless.@wifi-iface[3].network=lan
- uci set wireless.@wifi-iface[3].ssid=rootap_5G
- uci set wireless.@wifi-iface[3].device=wifi1

QUALCOMM
2016-12-19 19:00:29 PST
quanhai.zhang@arrowasia.com

Q-WRAP vs. EXTAP vs. WDS

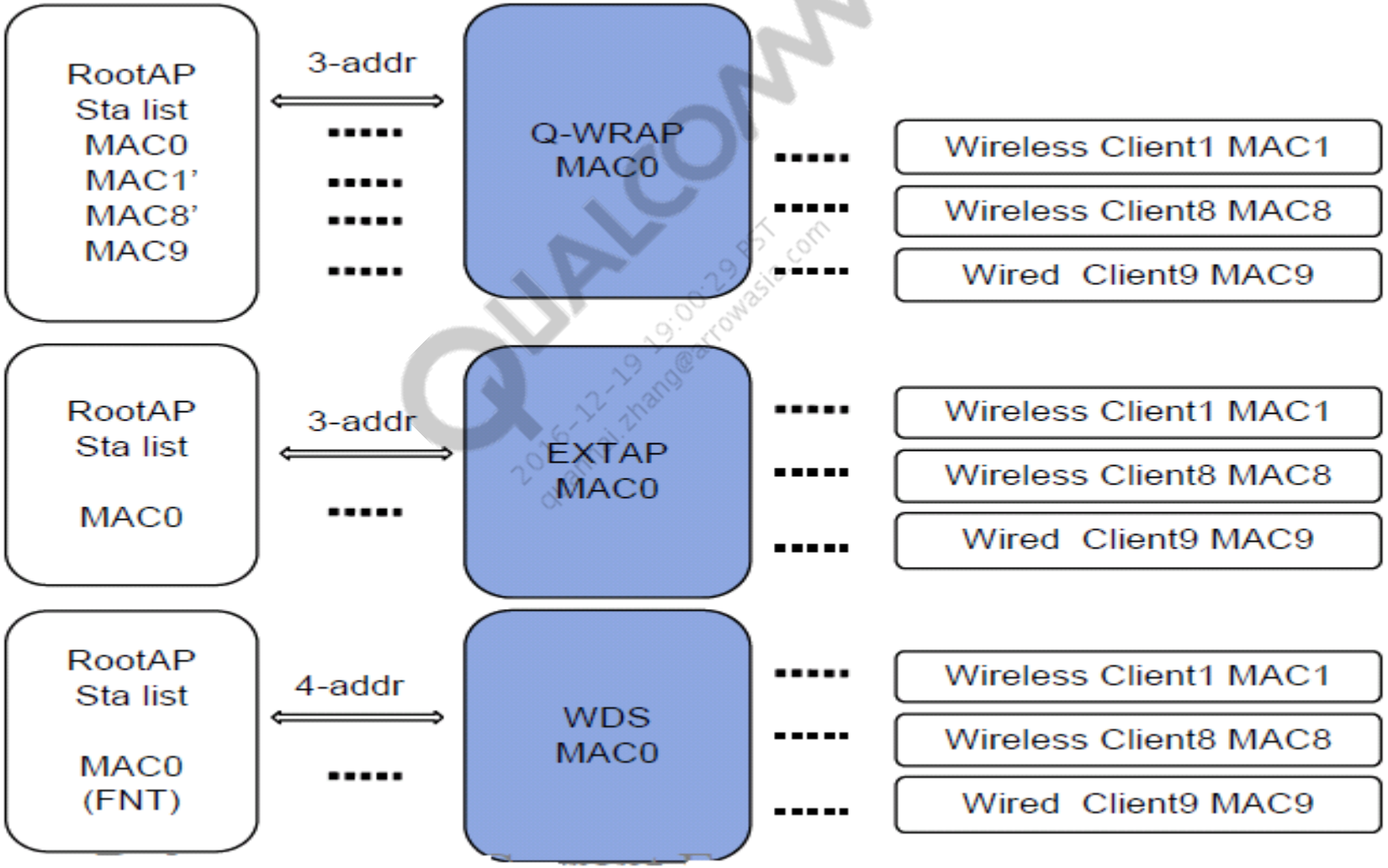

QUALCOMM®
2016-12-19 19:00:29 PST
qianli zhang@arrowasia.com

DBDC Repeater

QUALCOMM
2016-12-19 19:00:29 PST
quanhai.zhang@arrowasia.com

Challenges for DBDC Repeater

- Looping of Multicast/Broadcast packets
- Achieving Load balance
- Ethernet client traffic on desired radio’s STA VAP
- Auto Detection of DBDC RootAP connection

QUALCOMM®
2016-12-19 19:00:29 PST
quanhai.zhang@arrowasia.com

Challenges for DBDC Repeater (1/4)

- Looping of Multicast/Broadcast packets
  - Multicast/broadcast packet sent by Ethernet client A5 is received on Repeater Bridge. Then Bridge forwards the packet to all VAPs. DBDC Repeater sends the packet to RootAP through both ath01 and ath11 interface. Packet sent on one STA VAP will be received on the other STA VAP.

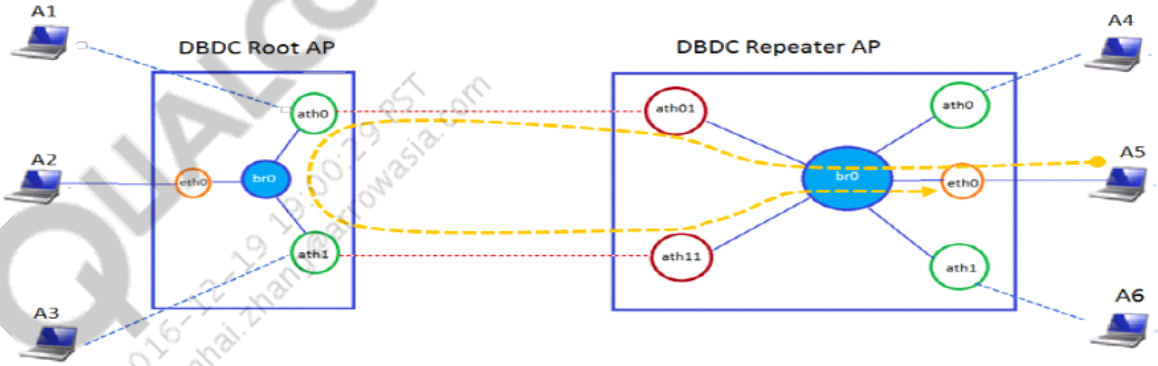

  - Multicast/broadcast packet sent by client A2 will get looped because both ath01 and ath11 of DBDC Repeater are connected on common bridge.

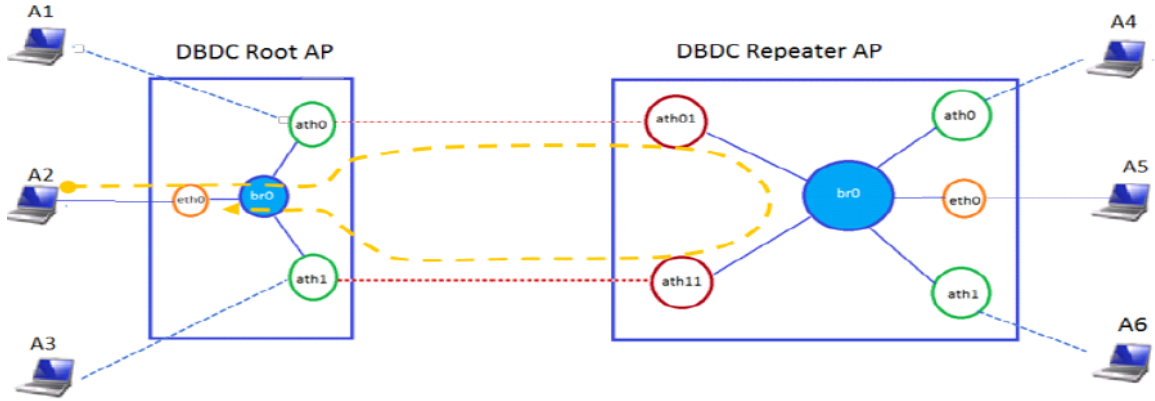

QUALCOMM®

Challenges for DBDC Repeater (2/4)

- Achieving Load balance
  - Traffic from client connected with DBDC Repeater will reach DBDC RootAP either through 2.4 GHz STA VAP or 5 GHz STA VAP based on Repeater bridge learning. For example, If ARP request (broadcast packet) is sent from DBDC Root AP on both AP VAPs, DBDC Repeater will get that packet on both the STA VAPs. Repeater Bridge updates its forwarding table based on the latest received frame. ARP reply (unicast packet) from client connected with DBDC Repeater can be sent on either on 2.4 GHz or 5 GHz STA VAP. In order to achieve the load balance, below two conditions should be met:
    - Traffic from clients connected with 2.4 GHz radio should use only 2.4 GHz STA VAP to reach DBDC Root AP.
    - Traffic from clients connected with 5 GHz radio should use only 5 GHz STA VAP to reach DBDC Root AP.

QUALCOMM®

Challenges for DBDC Repeater (3/4)

- Ethernet client traffic on desired radio's STA VAP
  - When DBDC Repeater is connected with two different RootAPs, looping of multicast/broadcast packets won't occur and based on Repeater bridge learning packet will be forwarded to either 2.4 GHz or 5 GHz STA VAP to reach destination associated with anyone of the RootAPs. DBDC Repeater should able to identify the connection with DBDC RootAP without any user inputs.

QUALCOMM®
2016-12-19 19:00:29 PST
quanhai.zhang@arrowasia.com

Challenges for DBDC Repeater (4/4)

- Auto Detection of DBDC RootAP connection
  - Based on user configuration, Ethernet client traffic from DBDC Repeater should be sent on desired radio's STA VAP to reach DBDC RootAP. User can change this configuration dynamically and allow Ethernet client traffic to be sent on either 2.4 GHz STA VAP or 5 GHz STA VAP.

QUALCOMM®
2016-12-19 19:00:29 PST
quanhai.zhang@arrowasia.com

Loop Avoidance and Load Balancing (1/2)

- When loop is detected, received packet on DBDC Repeater from DBDC RootAP should be handled as mentioned below:
  - The secondary radio's STA VAP will ignore the multicast/broadcast packets received from DBDC RootAP and let them be processed only through the primary radio STA VAP interface. This helps to avoid the looping of multicast packets.

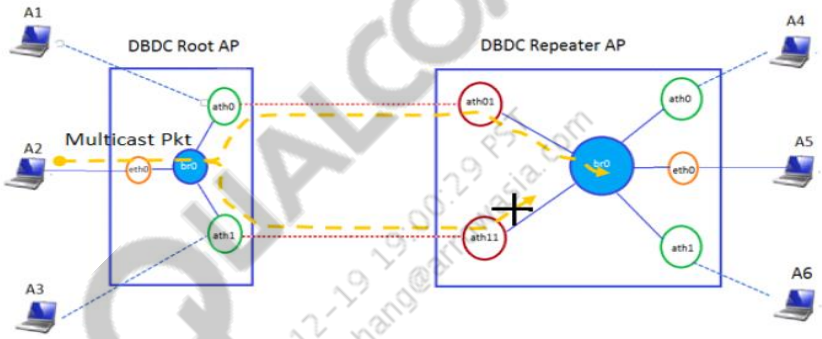

  - When unicast packet from DBDC RootAP is received on secondary radio's STA VAP, modify packet header to indicate Repeater Bridge that the unicast packet comes from primary radio's STA-VAP. Hence, the Repeater Bridge learns all MAC address associated with DBDC RootAP as reachable through primary radio's STA VAP only.

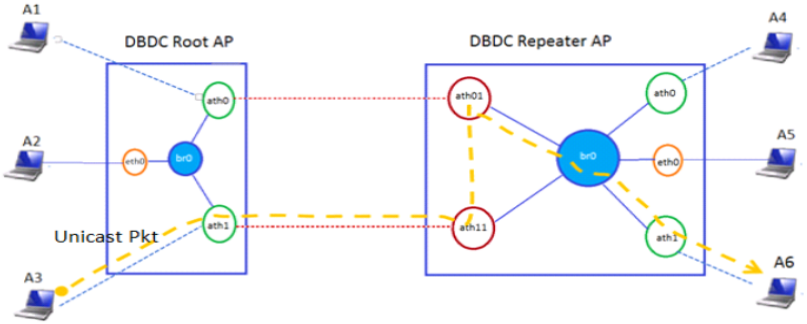

  - For the multicast/broadcast/unicast packets received from DBDC RootAP on the primary radio's STA VAP of the repeater, there is no change other than regular packet processing is already done.

QUALCOMM®

Loop Avoidance and Load Balancing (2/2)

- When loop is detected, the packet that needs to be transmitted from DBDC Repeater to DBDC RootAP should be handled as mentioned below.
  - When the bridge of the repeater gives multicast packet to the primary radio's STA VAP, the packet will be discarded if the source MAC address is matching with any of the client associated with secondary radio. This in essence means that the multicast packet is transmitted if the originator of this packet belongs to the primary radio's AP VAP or the Ethernet network.
  - When the bridge of the repeater gives multicast packet to the secondary radio's STA VAP, send the packet only if the source MAC address is matching with any of client associated with secondary radio. This in essence means that all packets originating from clients of primary radio and Ethernet network will be dropped.

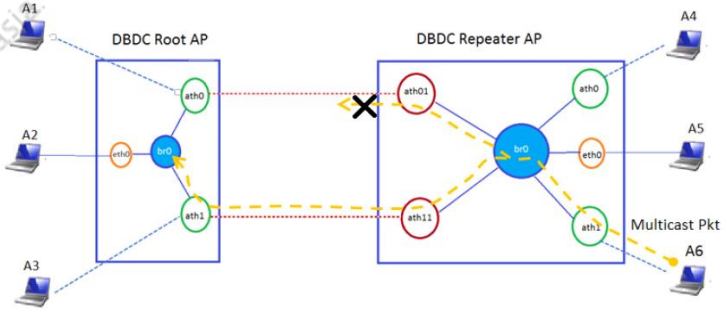

  - Hand over that packet to secondary radio's STA VAP if the packet source MAC address is matching with any of the client associated with secondary radio.

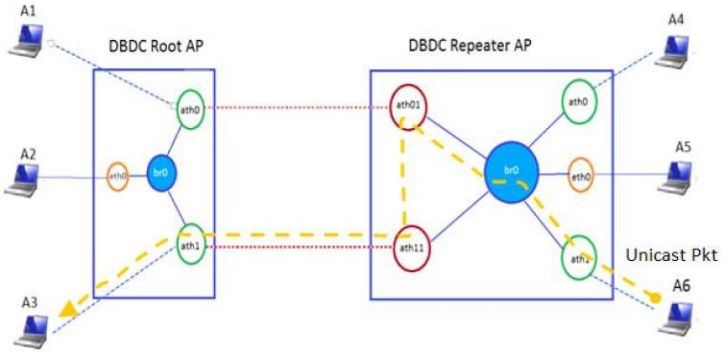

  - Transmit the packet as is if the originator of the packet belongs to the primary radio's AP VAP or the Ethernet network.

QUALCOMM
2016-12-19 19:00:29 57
quanhai.zhang@arrowasi.com

TBDC Repeater

QUALCOMM
2016-12-19 19:00:29 PST
quanhai.zhang@arrowasia.com

QWRAP: WRAPD

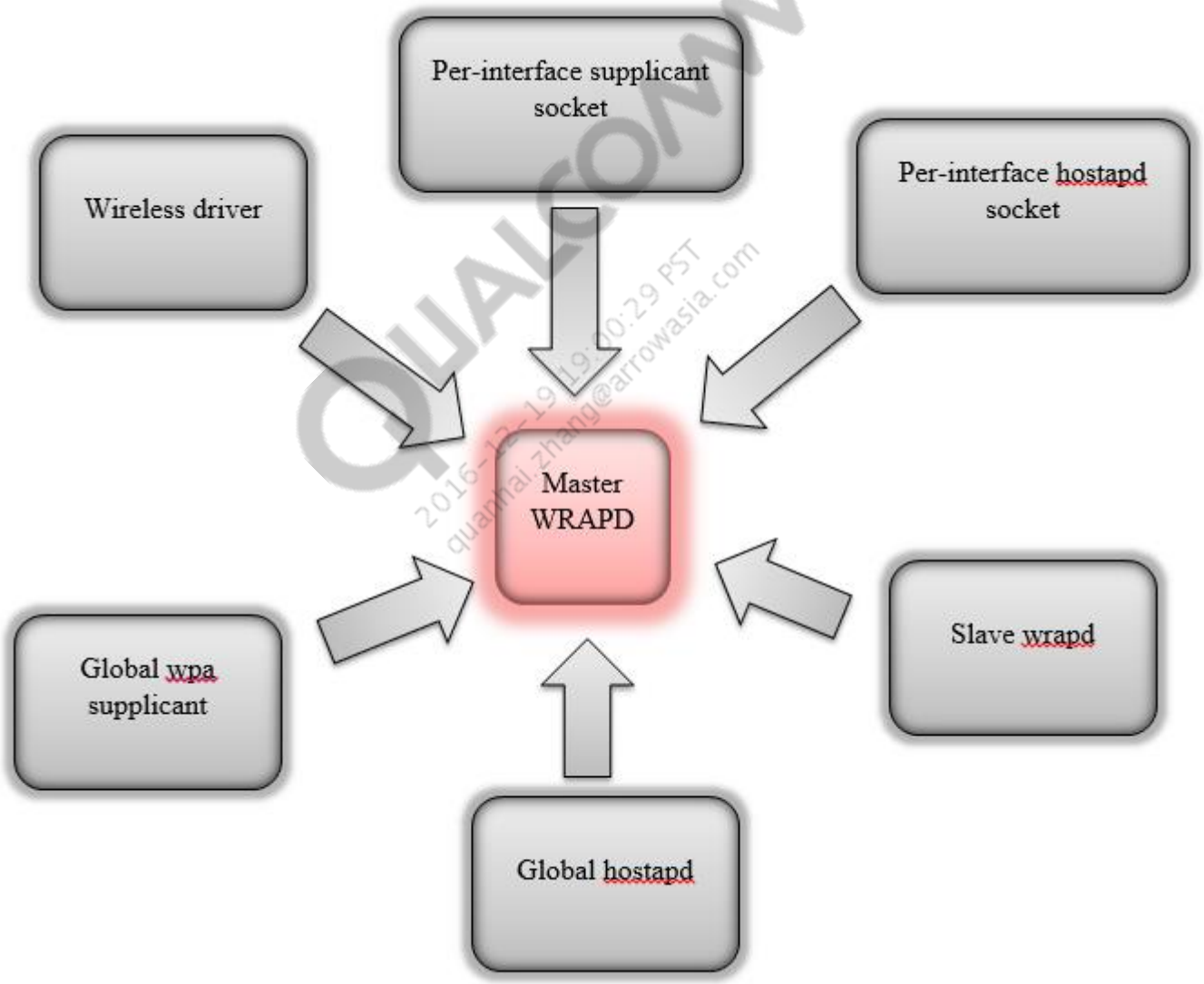

QUALCOMM®
2016-12-19 19:30:29 PST
quanhai.zhang@arrowasia.com

QWRAP: WRAPD Functions

- Slave WRAPD
  - Add or remove Wi-Fi interface
  - Add or remove AP interface
  - Add or remove MPSTA interface
  - Add or remove wired clients manually
  - Add or remove wired clients automatically
  - List wireless clients on each QWRAP radio
- Global hostapd
  - Master WRAPD issues command to add or remove AP via global hostapd process
- Global WPA supplicant
  - Master wrapd issues commands to add or remove supplicant interface via global WPA supplicant process
- Per interface wpa_supplicant socket
  - Wrapd receives CTRL-EVENT-DISCONNECTED/ CTRL-EVENT-CONNECTED when MPSTA disconnects/connects to Root AP
- Per interface hostapd socket
  - Wrapd received AP-STA-CONNECTED/ AP-STA-DISCONNECTED events for station connection/disconnected to QWRAP AP.

QUALCOMM®
2015-12-19 19:00:29 PST
quanhang@arrowasia.com

Tri-Radio QWRAP - Case 1

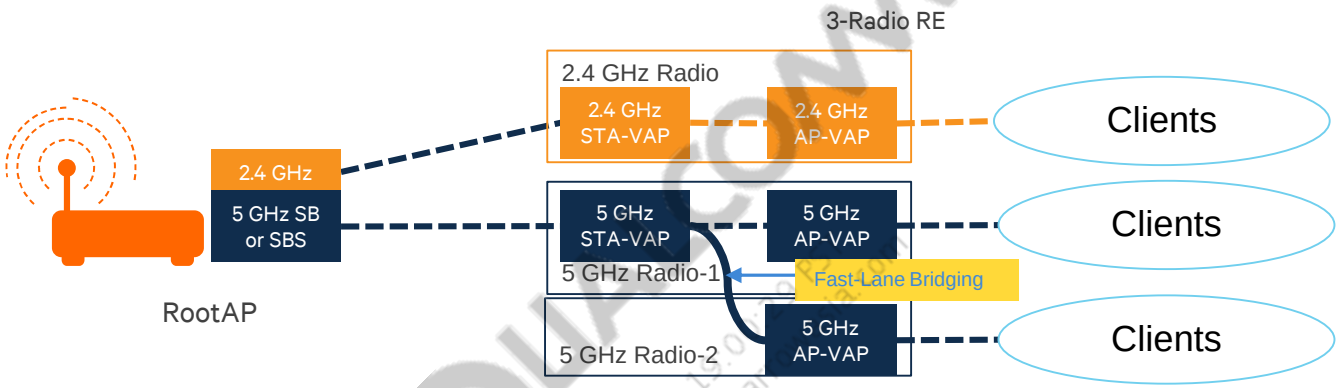

- Repeater has DBDC backhaul connections.
  - 5 G backhaul connects with High-Band or Low Band RE radios depends on RAP channel. It should be configured on the fly without driver re-load or system re-boot.
- Repeater has 3-Radio access for clients.
- Repeater Configurations
  - 2 G RE Radio in QWRAP mode
  - 5 G RE Radio-1 (LB or HB) in QWRAP mode
  - 5 G RE Radio-2 (HB or LB) in AP mode bridging traffics between 5 G RE Radio-1 to backhaul.

Tri-Radio QWRAP - Case 2

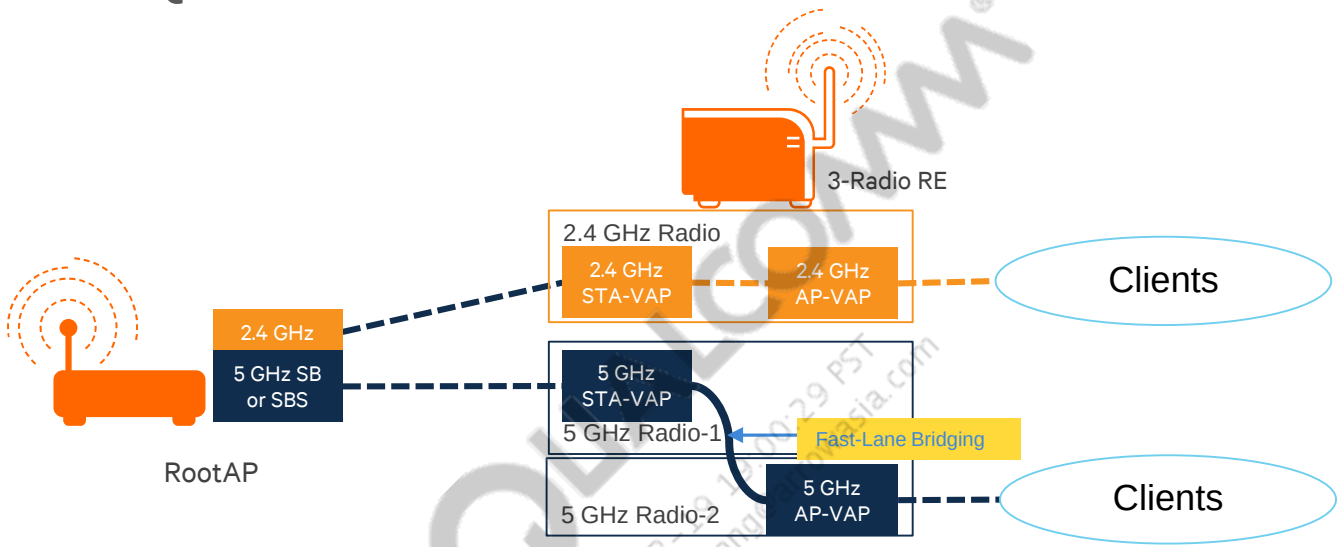

- Repeater has DBDC backhaul connections.
  - 5 G backhaul connects with High-Band or Low Band RE radios depends on RAP channel. It should be configured on the fly without driver re-load or system re-boot.
- Repeater has DBDC access for clients.
- Repeater Radio Configurations
  - 2 G RE Radio in QWRAP mode
  - 5 G RE Radio-1 (LB or HB) as 5 G dedicated backhaul in QWRAP mode without AP-VAP.
  - 5 G RE Radio-2 (HB or LB) as dedicated access AP mode fast-lane bridging traffics between 5G RE Radio-1 to backhaul

Thank You

QUALCOMM
2016-12-19 19:00:29 PST
quanhai.zhang@arrowasia.com