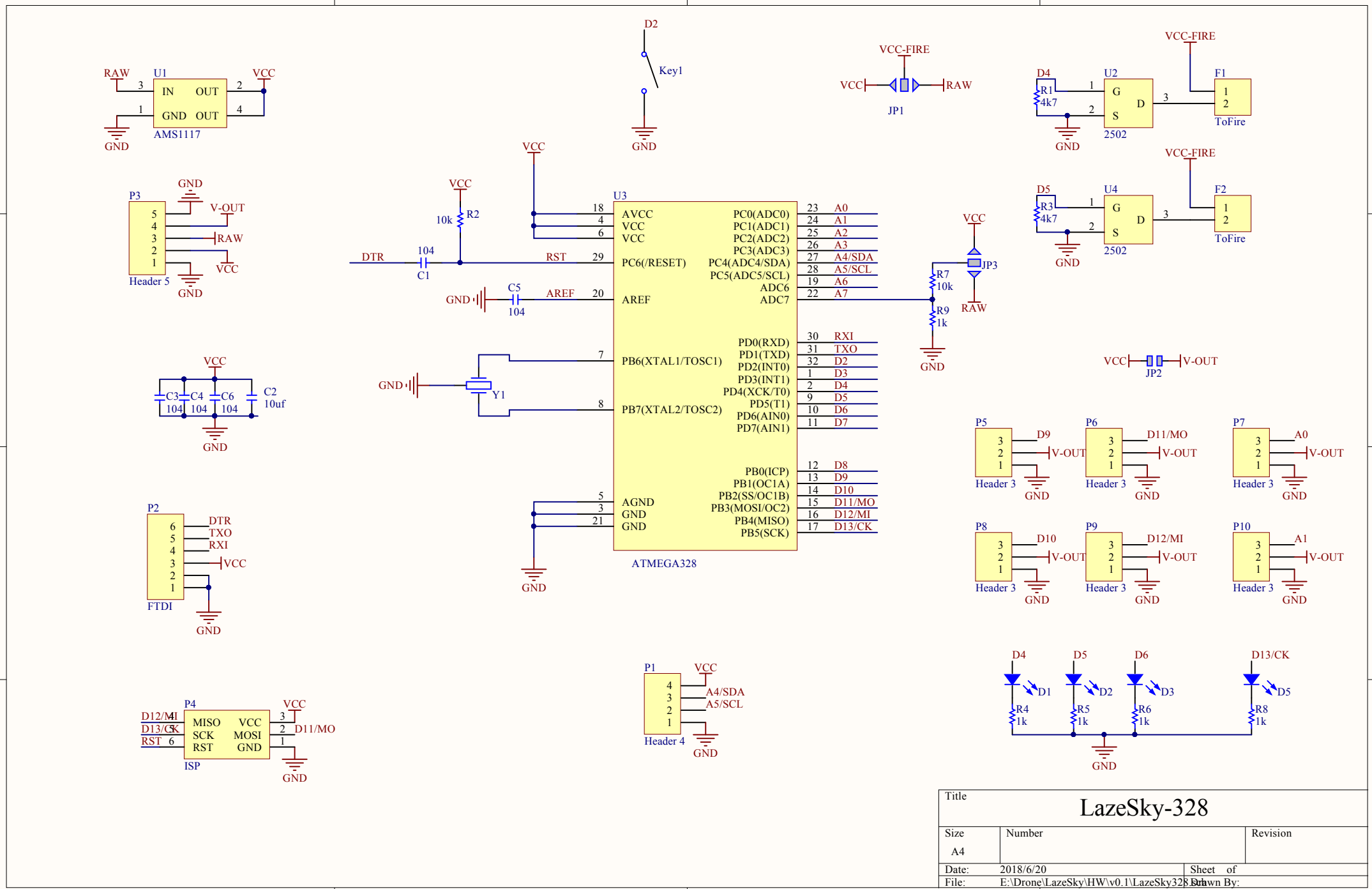

U1
AMS1117
IN
OUT
GND
RAW
VCC
GND
D2
Key1
VCC-FIRE
JP1
D4
R1
4k7
U2
2502
F1
ToFire
D5
R3
4k7
U4
2502
F2
ToFire
P3
Header 5
V-OUT
U3
ATMEGA328
AVCC
VCC
PC6(/RESET)
AREF
PB6(XTAL1/TOSC1)
PB7(XTAL2/TOSC2)
AGND
PC0(ADC0)
PC1(ADC1)
PC2(ADC2)
PC3(ADC3)
PC4(ADC4/SDA)
PC5(ADC5/SCL)
ADC6
ADC7
PD0(RXD)
PD1(TXD)
PD2(INT0)
PD3(INT1)
PD4(XCK/T0)
PD5(T1)
PD6(AIN0)
PD7(AIN1)
PB0(ICP)
PB1(OC1A)
PB2(SS/OC1B)
PB3(MOSI/OC2)
PB4(MISO)
PB5(SCK)
DTR
RST
AREF
R2
10k
C1
104
C5
104
Y1
R7
10k
R9
1k
JP3
JP2
C3
C4
C6
C2
10uf
P2
FTDI
TXO
RXI
P5
P6
P7
P8
P9
P10
Header 3
D9
D11/MO
D10
D12/MI
A0
A1
P1
Header 4
A4/SDA
A5/SCL
P4
ISP
MISO
SCK
MOSI
D12/MI
D13/CK
D11/MO
D1
D2
D3
D5
R4
R5
R6
R8
1k
Title
LazeSky-328
Size
A4
Number
Revision
Date: 2018/6/20
Sheet of
File: E:\Drone\LazeSky\HW\v0.1\LazeSky328.Sch
Drawn By:

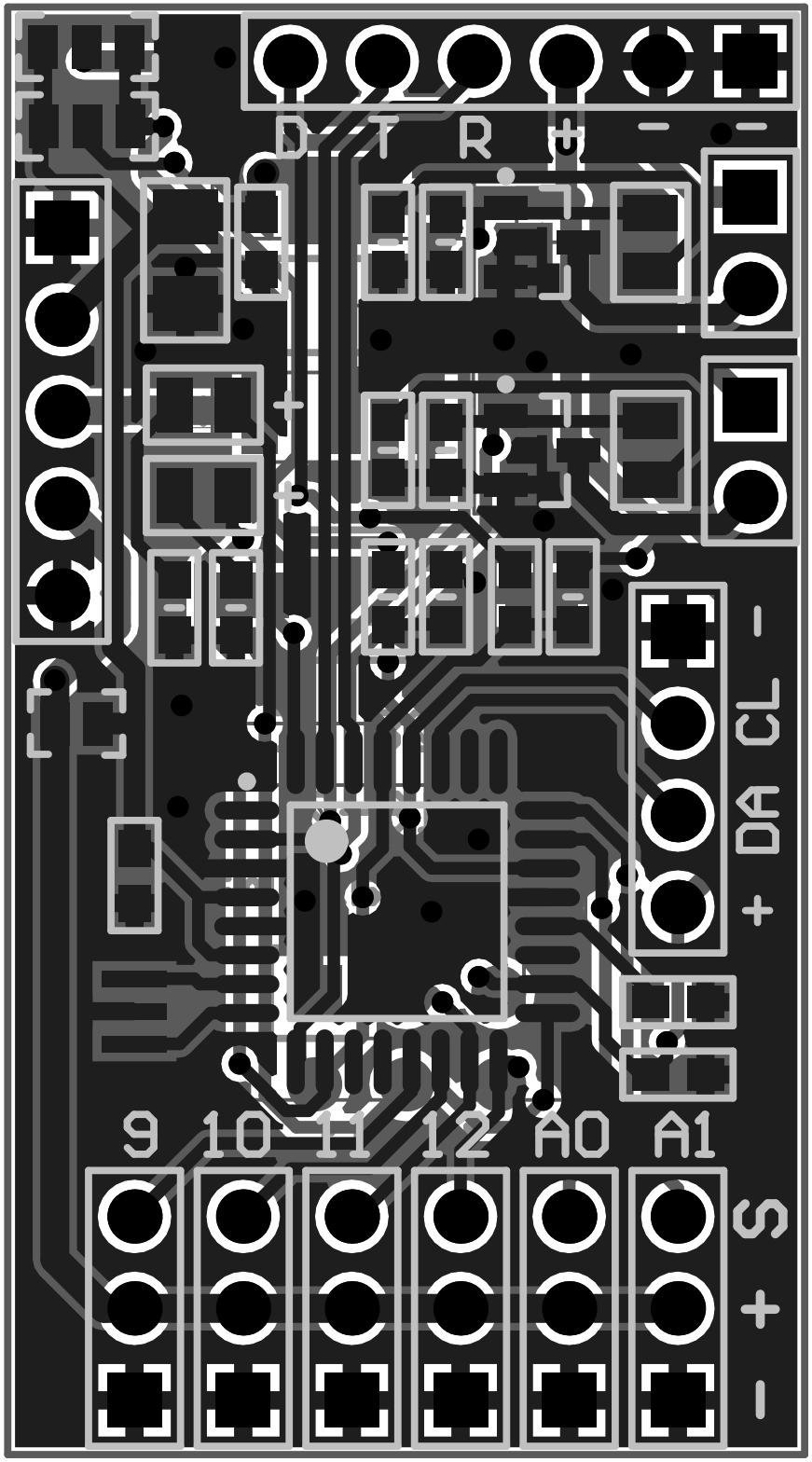
D T R
+ - -
- CL
DA
+
9 10 11 12 A0 A1
S
+
-

| Comment | Description | Designator | Footprint | LibRef | Quantity |
|---|---|---|---|---|---|
| 104 | Capacitor | C1, C3, C4, C5, C6 | 0603 CAP | CAP | 5 |
| 10uf | Capacitor | C2 | 1206 | CAP | 1 |
| LED | Typical RED, GREEN, YELLOW, AMBER GaAs LED | D1, D2, D3, D5 | 0805 LED | LED | 4 |
| ToFire | Header, 2-Pin | F1, F2 | HDR1X2 | Header 2 | 2 |
| 2WaySelect | | JP1, JP3 | 2WaySelect | 2WaySelect | 2 |
| SJ | | JP2 | SJ | SJ | 1 |
| Key666 | | Key1 | KEY SMT 2FOOT | Key666 | 1 |
| Header 4 | Header, 4-Pin | P1 | HDR1X4 | Header 4 | 1 |
| FTDI | Header, 6-Pin | P2 | HDR1X6 | Header 6 | 1 |
| Header 5 | Header, 5-Pin | P3 | HDR1X5 | Header 5 | 1 |
| ISP | | P4 | ISP_PAD | ISP | 1 |
| Header 3 | Header, 3-Pin | P5, P6, P7, P8, P9, P10 | HDR1X3 | Header 3 | 6 |
| 4k7 | Resistor | R1, R3 | 0603 RES | Res | 2 |
| 10k | Resistor | R2, R7 | 0603 RES | Res | 2 |
| 1k | Resistor | R4, R5, R6, R8, R9 | 0603 RES | Res | 5 |
| AMS1117 | | U1 | ams1117 | AMS1117 | 1 |
| 2502 | | U2, U4 | 2502 | 2502 | 2 |
| ATmega328 | | U3 | ATMEGA328FIX | ATmega328 | 1 |
| Crystal3Foot | | Y1 | Crystal3Foot | Crystal3Foot | 1 |