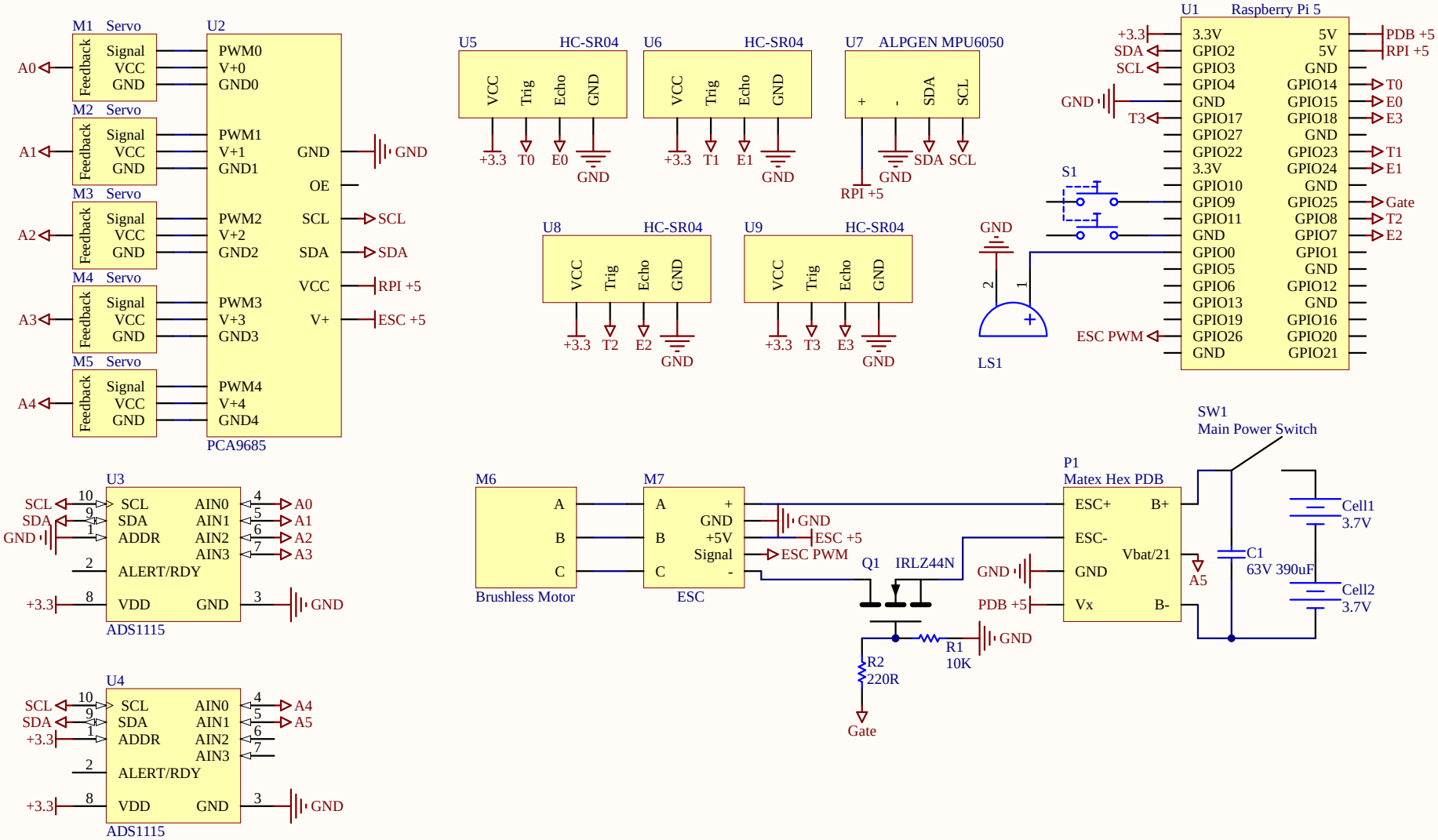

Title	322-ZAĞANOS WRO 2025 FE Robot Schematic	
Size A	Number	Revision
Date: 4/29/2025		Sheet of
File: G:\My Drive\..\Sheet1.SchDoc		Drawn By: 322-ZAĞANOS