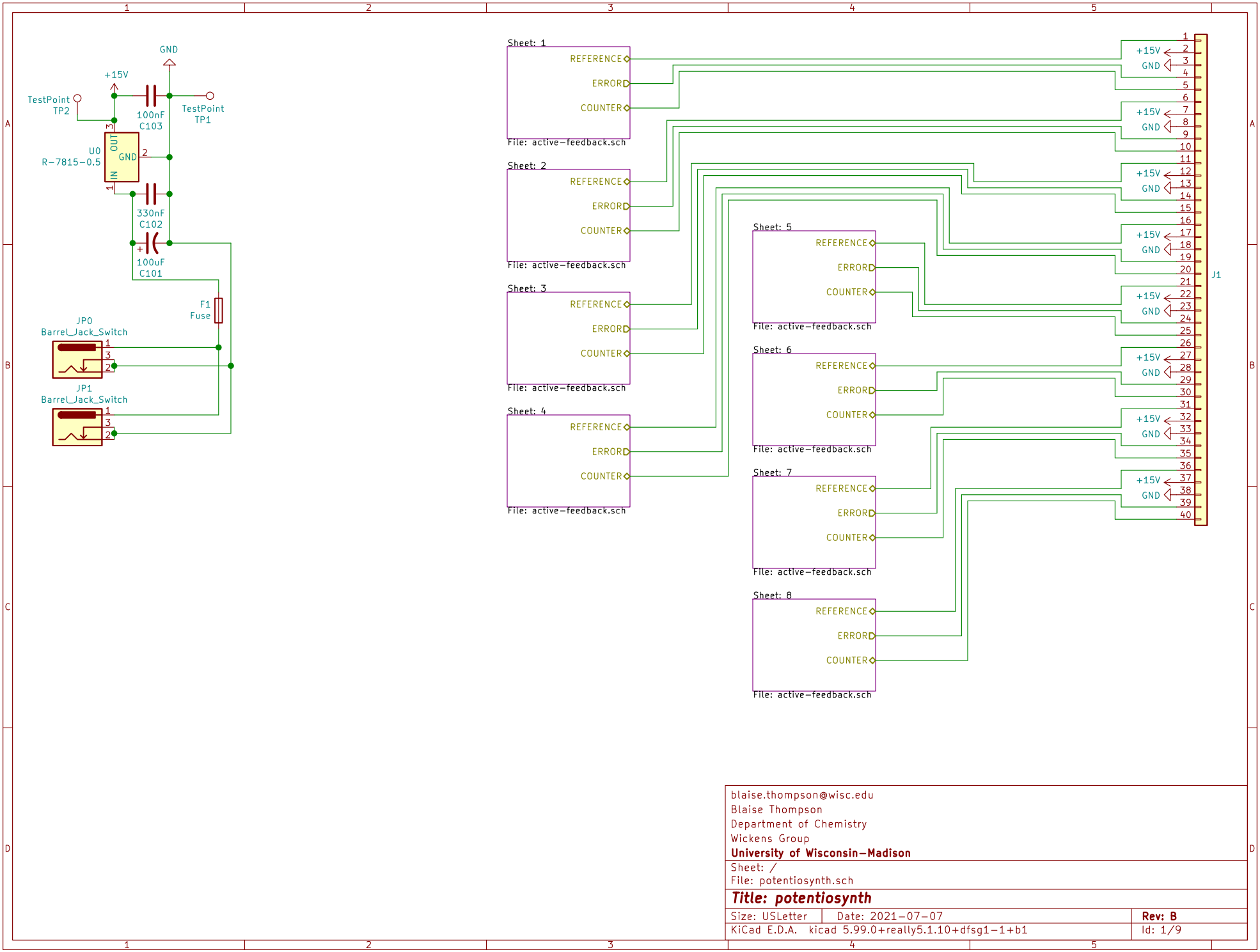

blaise.thompson@wisc.edu
Blaise Thompson
Department of Chemistry
Wickens Group
University of Wisconsin-Madison

Sheet: /
File: potentiosynth.sch

Title: potentiosynth

Size: USLetter	Date: 2021-07-07	**Rev: B**
KiCad E.D.A. kicad 5.99.0+really5.1.10+dfsg1-1+b1		Id: 1/9

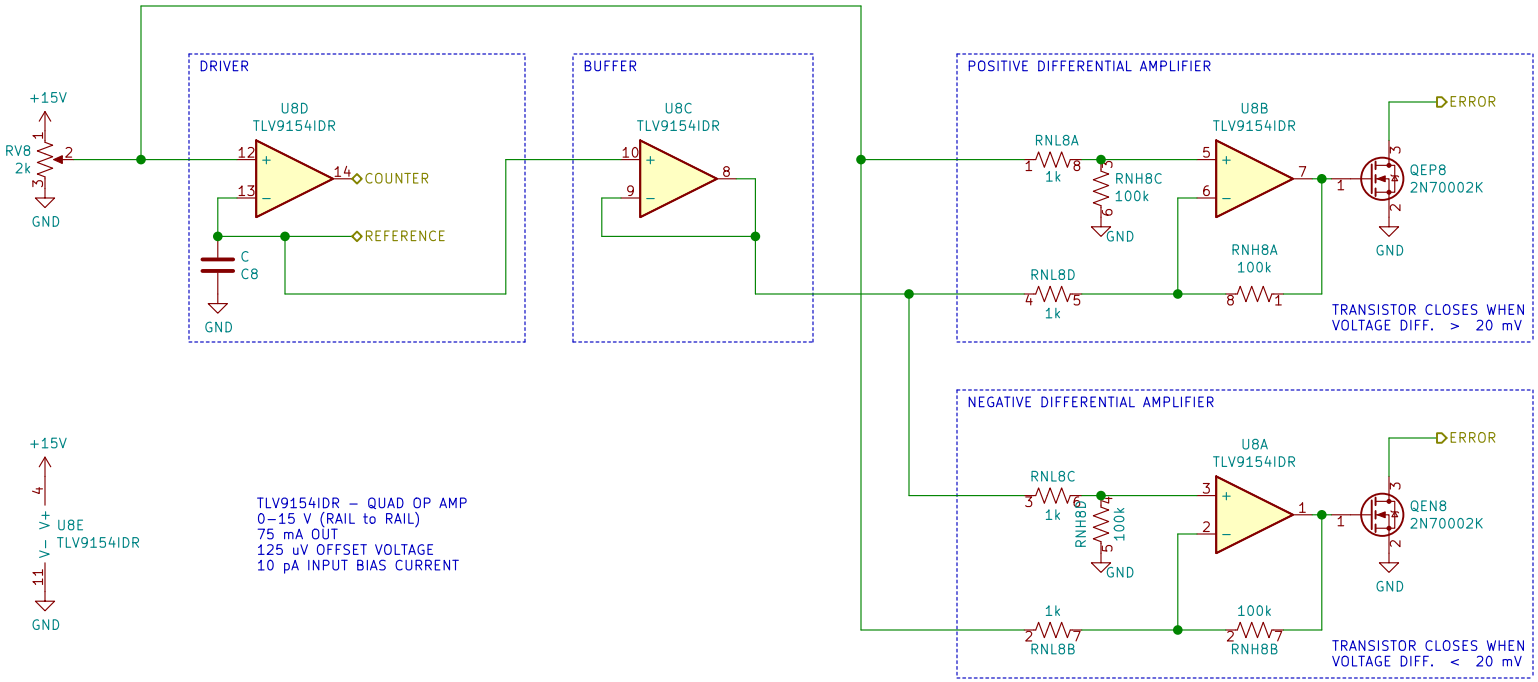

TLV9154IDR – QUAD OP AMP
0–15 V (RAIL to RAIL)
75 mA OUT
125 uV OFFSET VOLTAGE
10 pA INPUT BIAS CURRENT

blaise.thompson@wisc.edu
Blaise Thompson
Department of Chemistry
Wickens Group
University of Wisconsin–Madison

Sheet: /8/
File: active–feedback.sch

Title: potentiosynth

Size: USLetter	Date: 2021–07–07	**Rev: C**
KiCad E.D.A. kicad 5.99.0+really5.1.10+dfsg1–1+b1		Id: 2/9

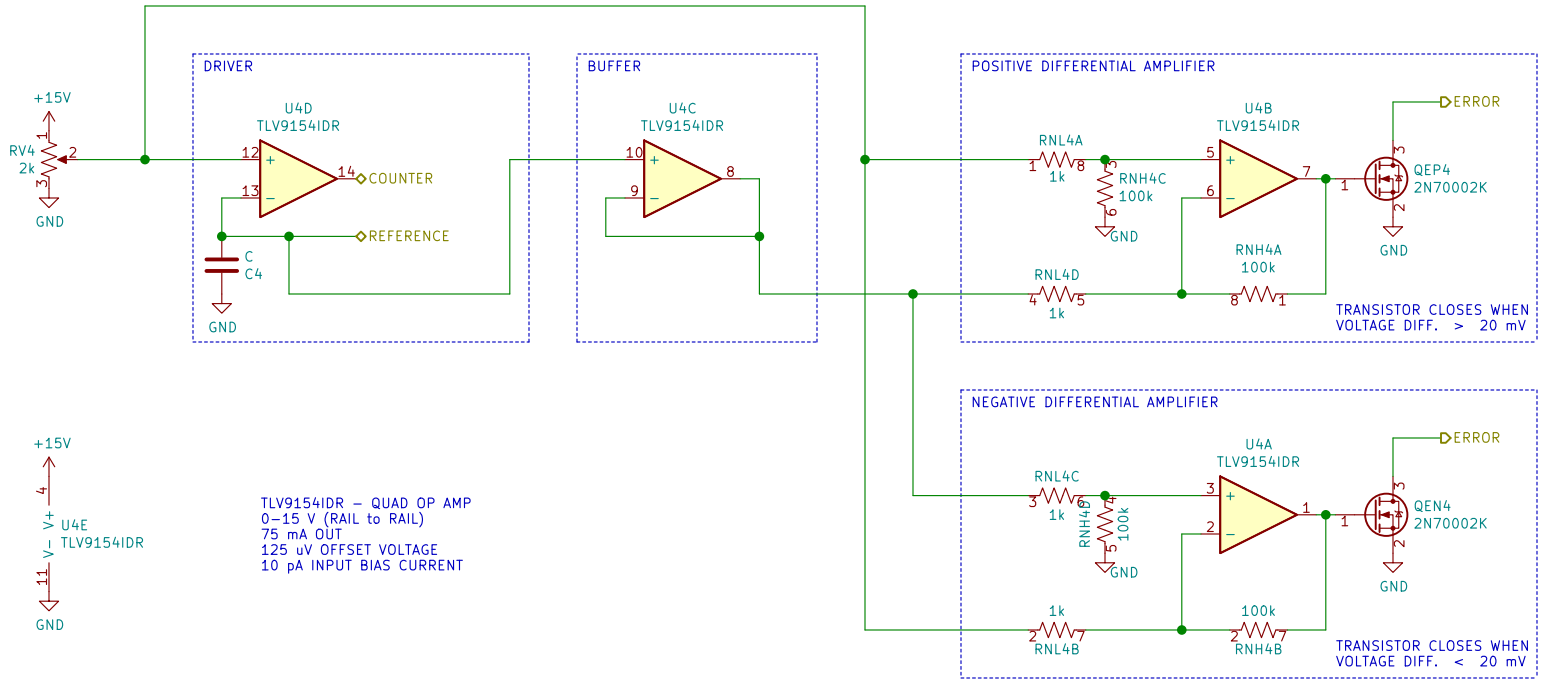

blaise.thompson@wisc.edu
Blaise Thompson
Department of Chemistry
Wickens Group
University of Wisconsin–Madison

Sheet: /4/
File: active–feedback.sch

Title: potentiosynth

Size: USLetter	Date: 2021–07–07	**Rev: C**
KiCad E.D.A. kicad 5.99.0+really5.1.10+dfsg1–1+b1		Id: 3/9

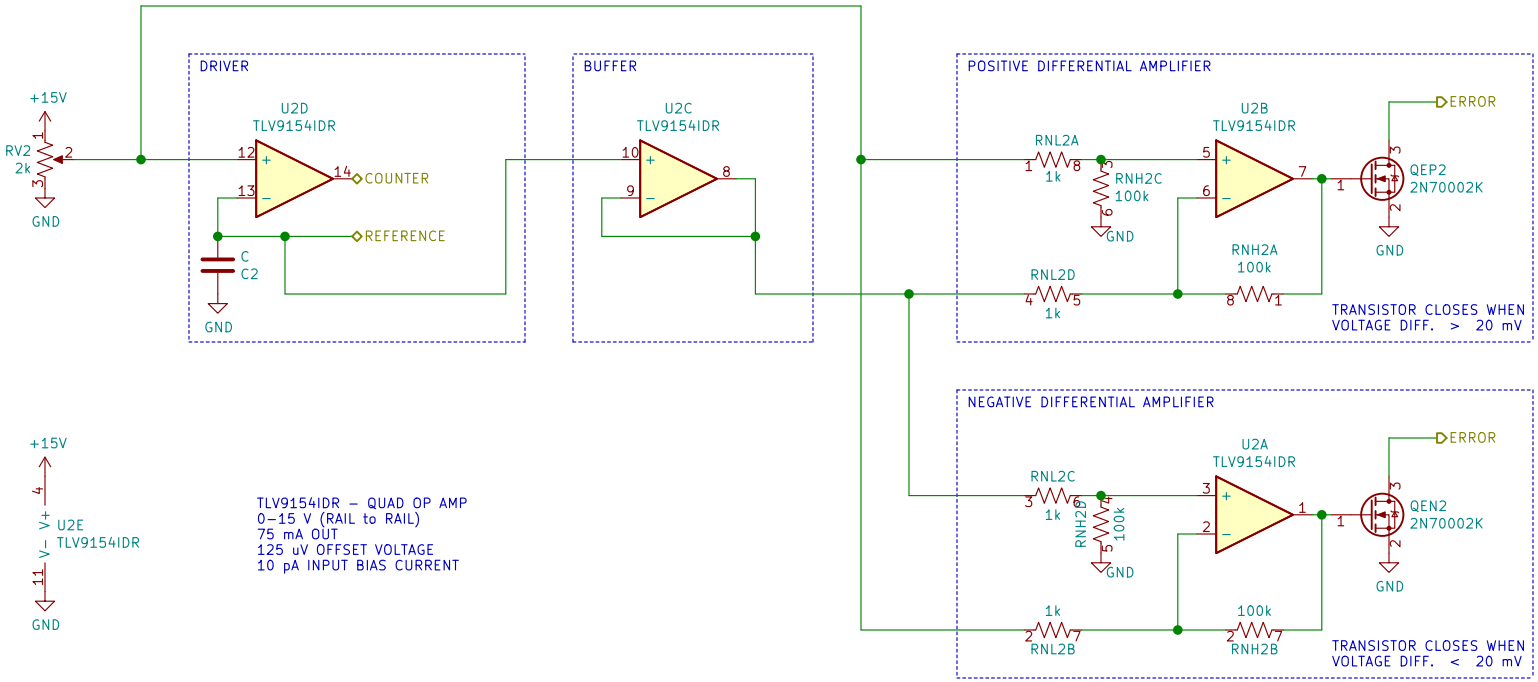

blaise.thompson@wisc.edu
Blaise Thompson
Department of Chemistry
Wickens Group
University of Wisconsin–Madison

Sheet: /2/
File: active–feedback.sch

Title: potentiosynth

Size: USLetter	Date: 2021–07–07	**Rev: C**
KiCad E.D.A. kicad 5.99.0+really5.1.10+dfsg1–1+b1		Id: 4/9

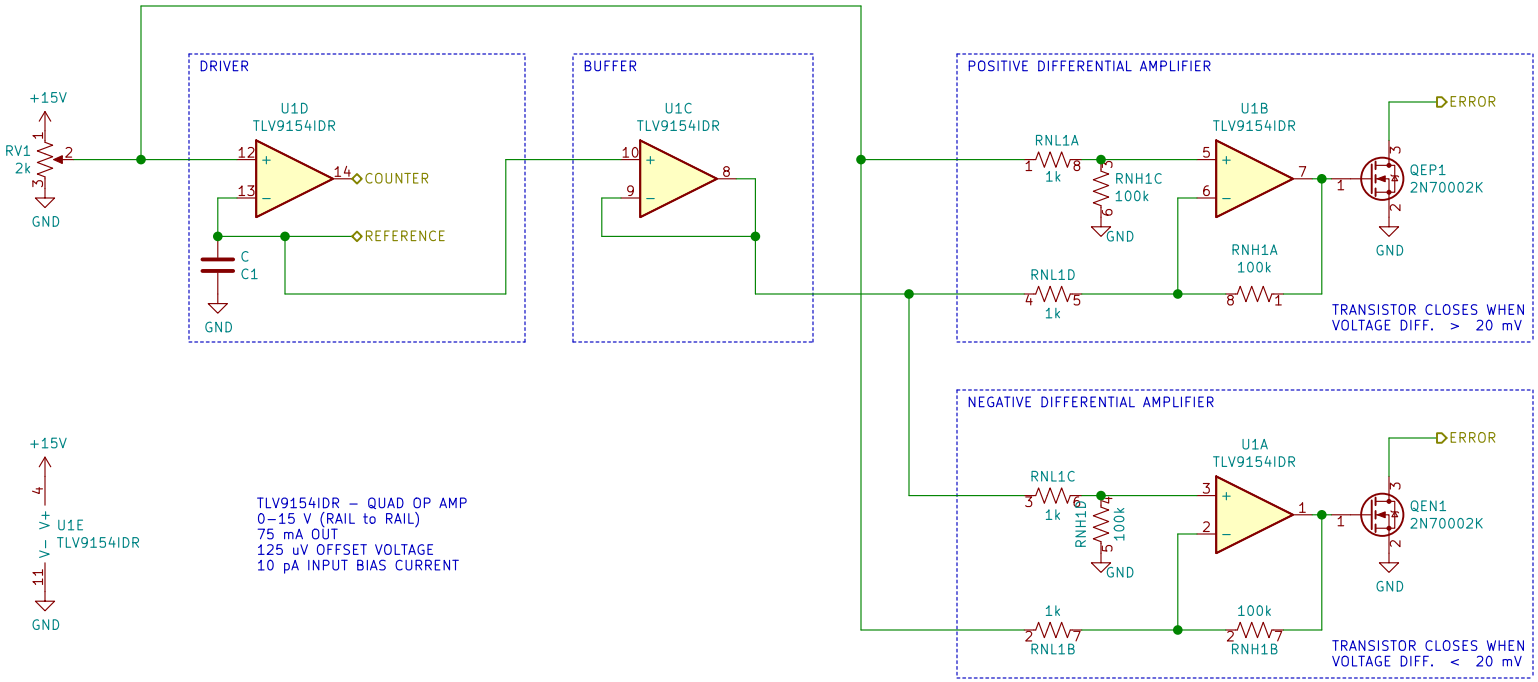

blaise.thompson@wisc.edu
Blaise Thompson
Department of Chemistry
Wickens Group
University of Wisconsin–Madison

Sheet: /1/
File: active–feedback.sch

Title: potentiosynth

Size: USLetter	Date: 2021–07–07	**Rev: C**
KiCad E.D.A. kicad 5.99.0+really5.1.10+dfsg1–1+b1		Id: 5/9

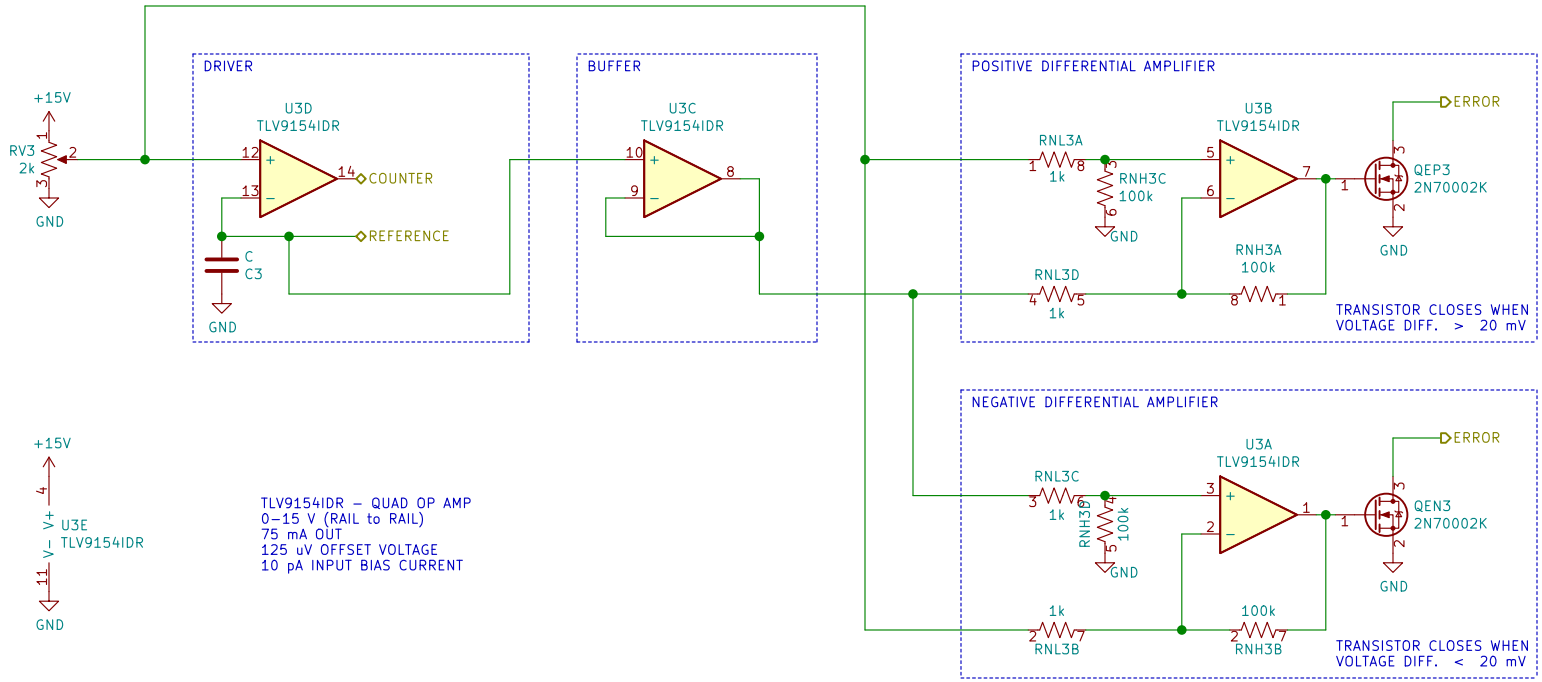

blaise.thompson@wisc.edu
Blaise Thompson
Department of Chemistry
Wickens Group
University of Wisconsin–Madison

Sheet: /3/
File: active–feedback.sch

Title: potentiosynth

Size: USLetter	Date: 2021–07–07	**Rev: C**
KiCad E.D.A. kicad 5.99.0+really5.1.10+dfsg1–1+b1		Id: 6/9

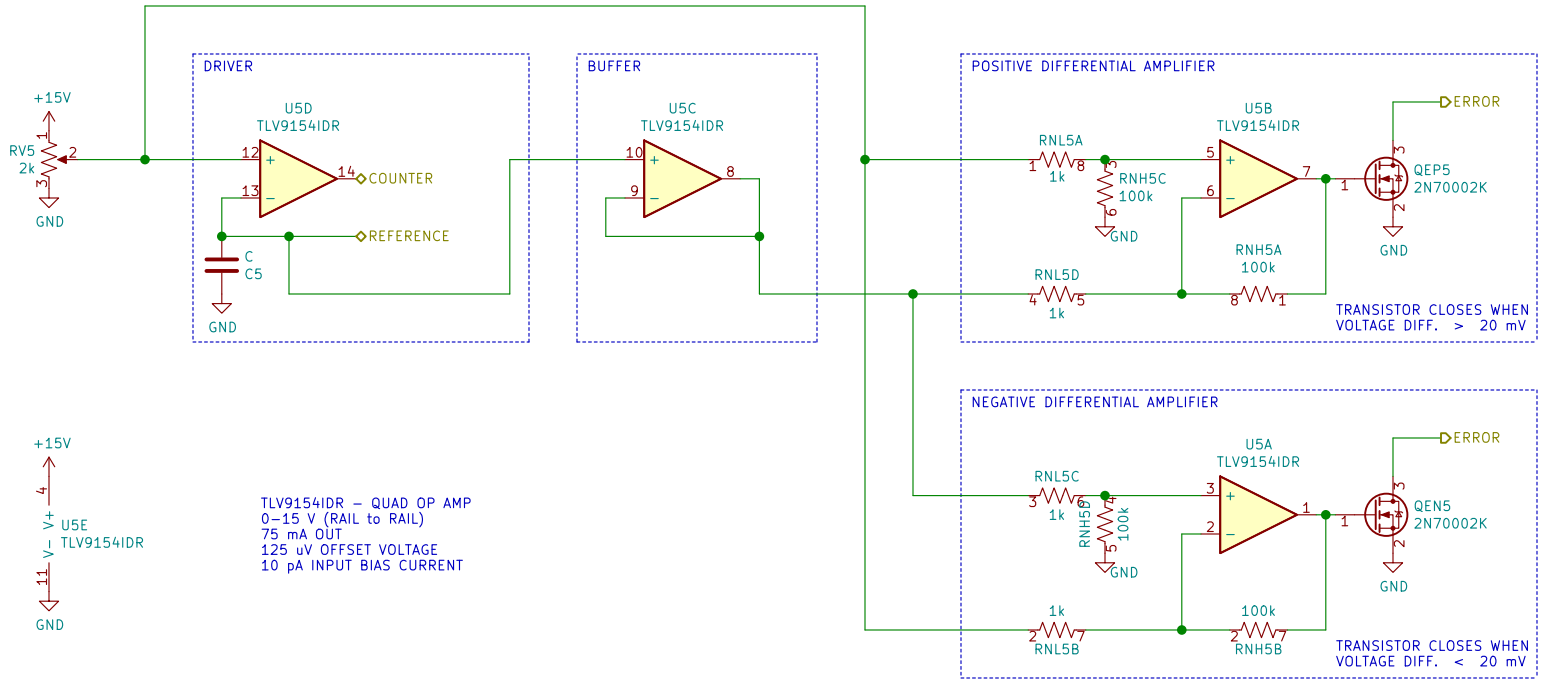

TLV9154IDR – QUAD OP AMP
0–15 V (RAIL to RAIL)
75 mA OUT
125 uV OFFSET VOLTAGE
10 pA INPUT BIAS CURRENT

blaise.thompson@wisc.edu
Blaise Thompson
Department of Chemistry
Wickens Group
University of Wisconsin–Madison

Sheet: /5/
File: active–feedback.sch

Title: potentiosynth

Size: USLetter	Date: 2021–07–07	**Rev: C**
KiCad E.D.A. kicad 5.99.0+really5.1.10+dfsg1–1+b1		Id: 7/9

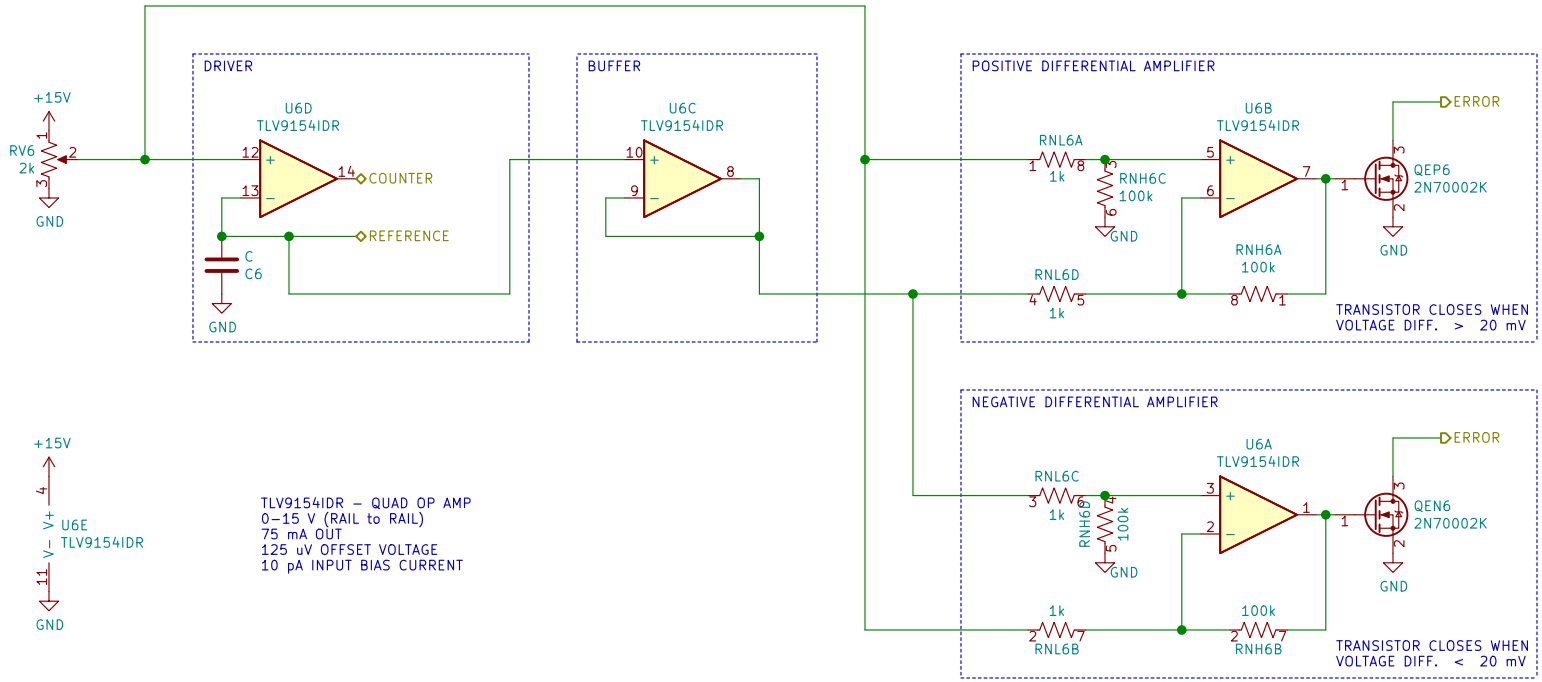

blaise.thompson@wisc.edu
Blaise Thompson
Department of Chemistry
Wickens Group
University of Wisconsin–Madison

Sheet: /6/
File: active–feedback.sch

Title: potentiosynth

Size: USLetter	Date: 2021–07–07	**Rev: C**
KiCad E.D.A. kicad 5.99.0+really5.1.10+dfsg1–1+b1		Id: 8/9

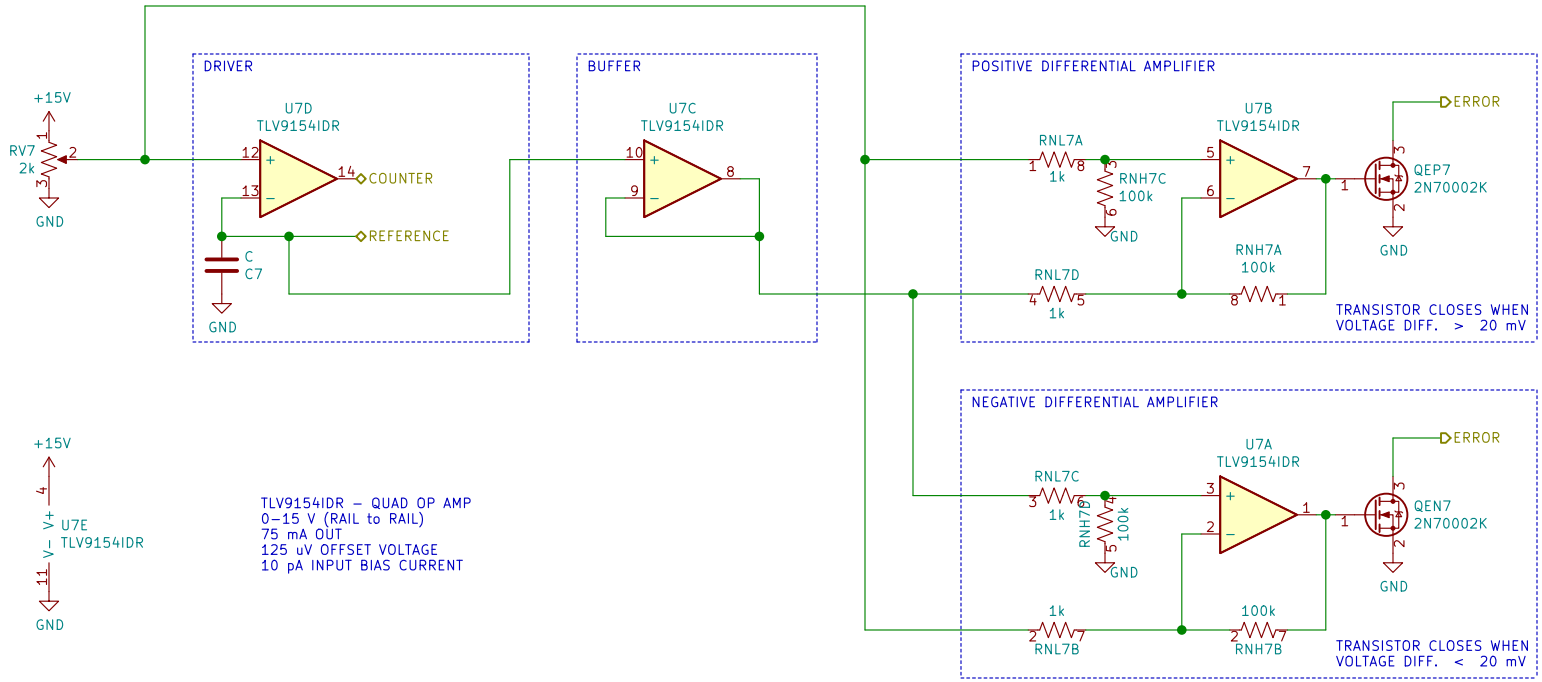

TLV9154IDR – QUAD OP AMP
0–15 V (RAIL to RAIL)
75 mA OUT
125 uV OFFSET VOLTAGE
10 pA INPUT BIAS CURRENT

blaise.thompson@wisc.edu
Blaise Thompson
Department of Chemistry
Wickens Group
University of Wisconsin–Madison

Sheet: /7/
File: active–feedback.sch

Title: potentiosynth

Size: USLetter	Date: 2021–07–07	**Rev: C**
KiCad E.D.A. kicad 5.99.0+really5.1.10+dfsg1–1+b1		Id: 9/9