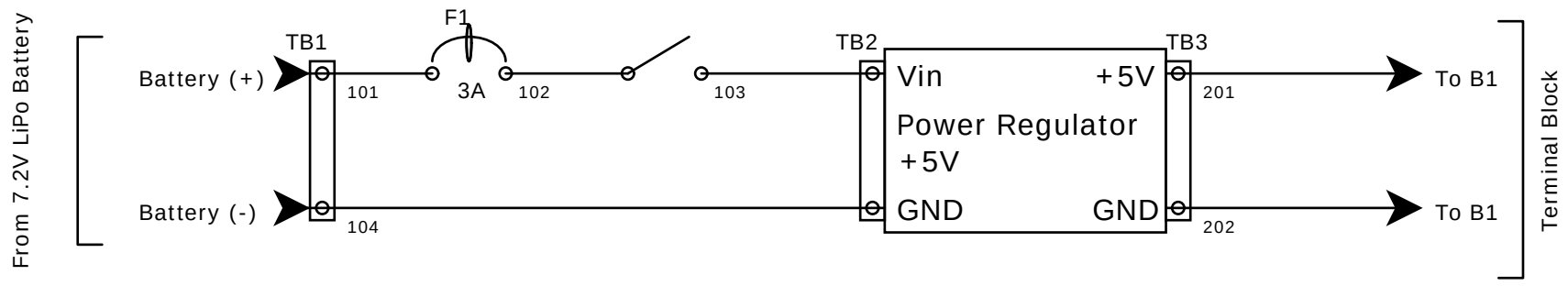

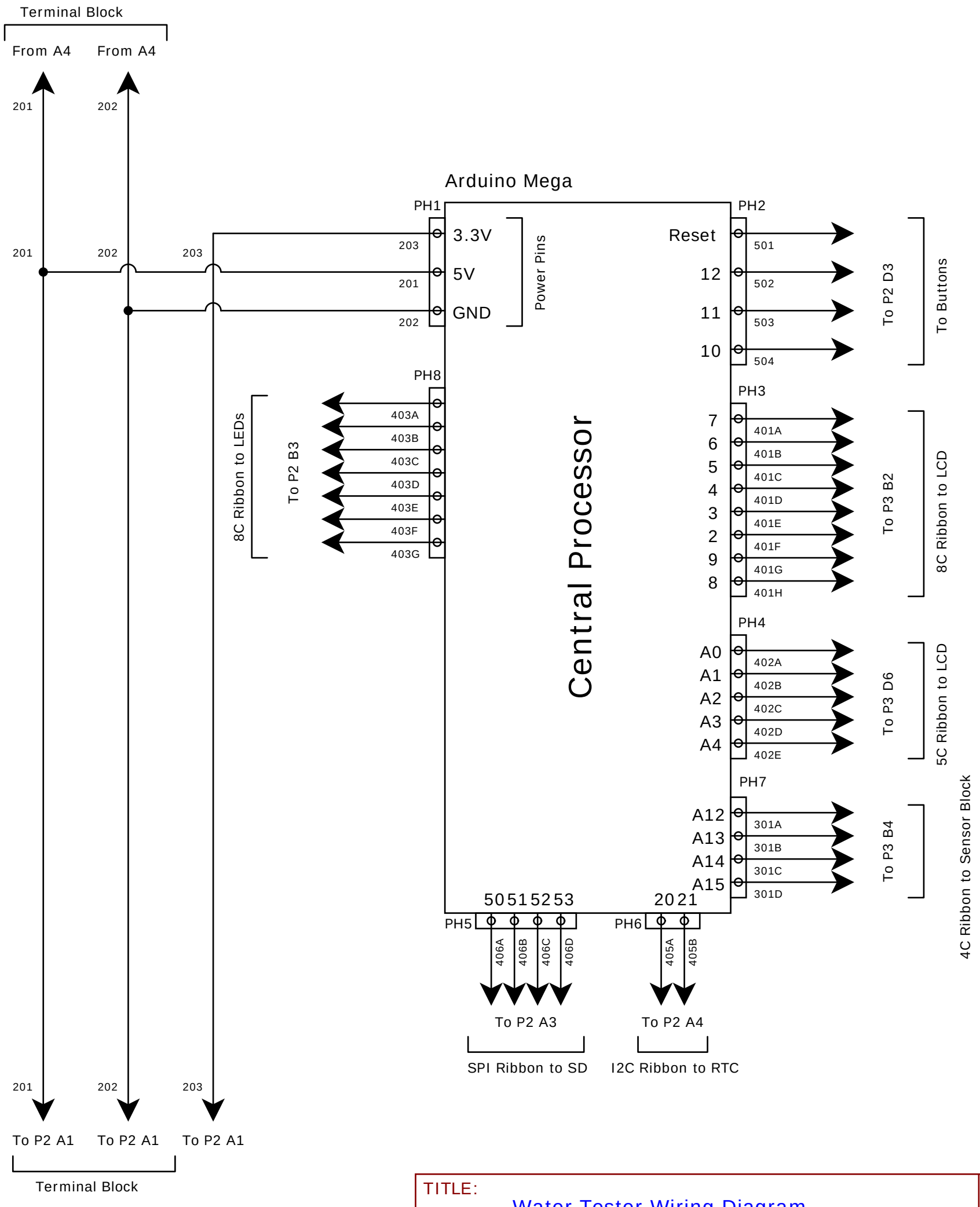

TITLE: Water Tester Wiring Diagram		REV: 3.0
	Company: Skyline MESA	Sheet: 1/3
	Date:	Drawn By: Adrian Sucahyo

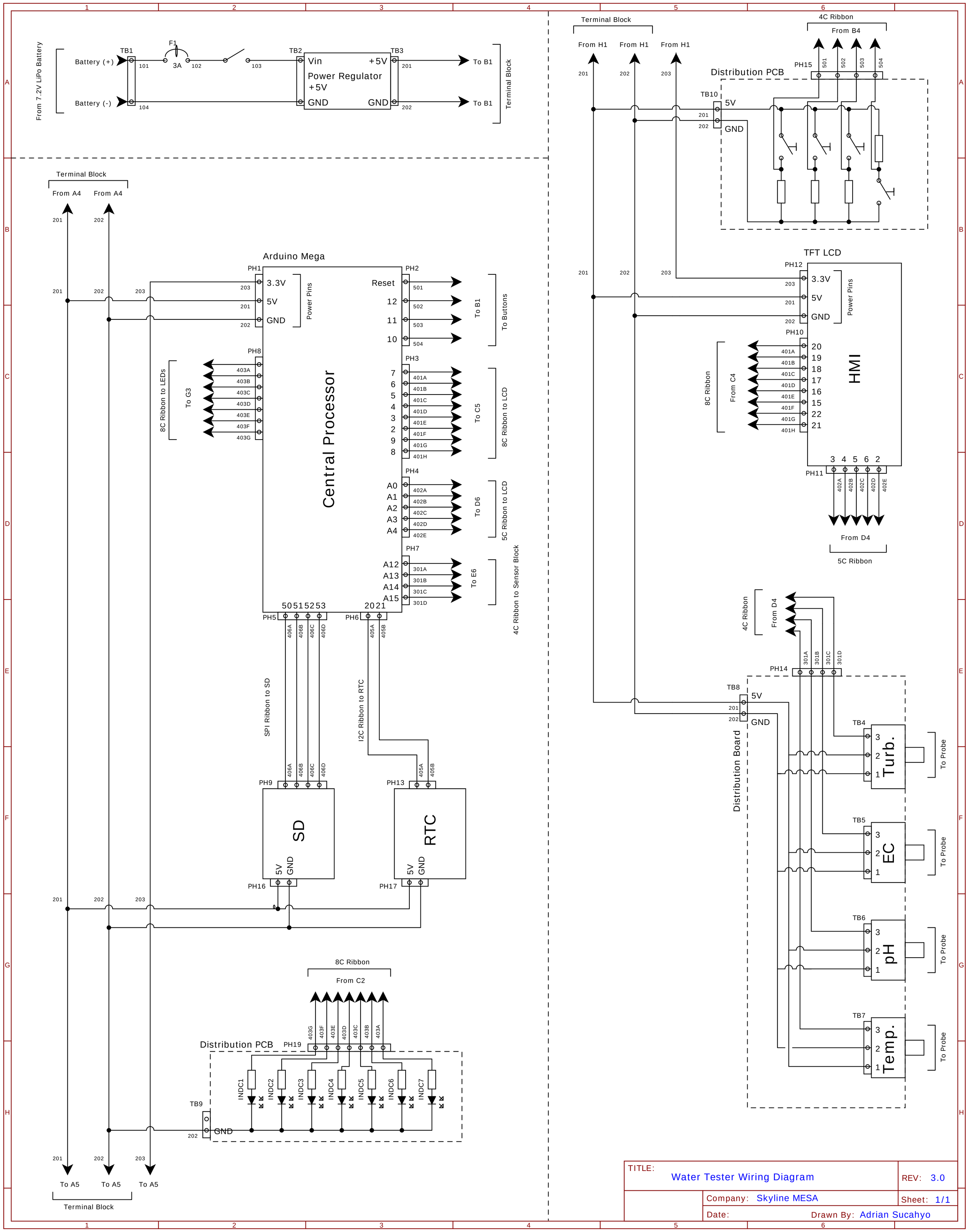

TITLE: Water Tester Wiring Diagram	REV: 3.0
Company: Skyline MESA	Sheet: 1/1
Date:	Drawn By: Adrian Sucahyo

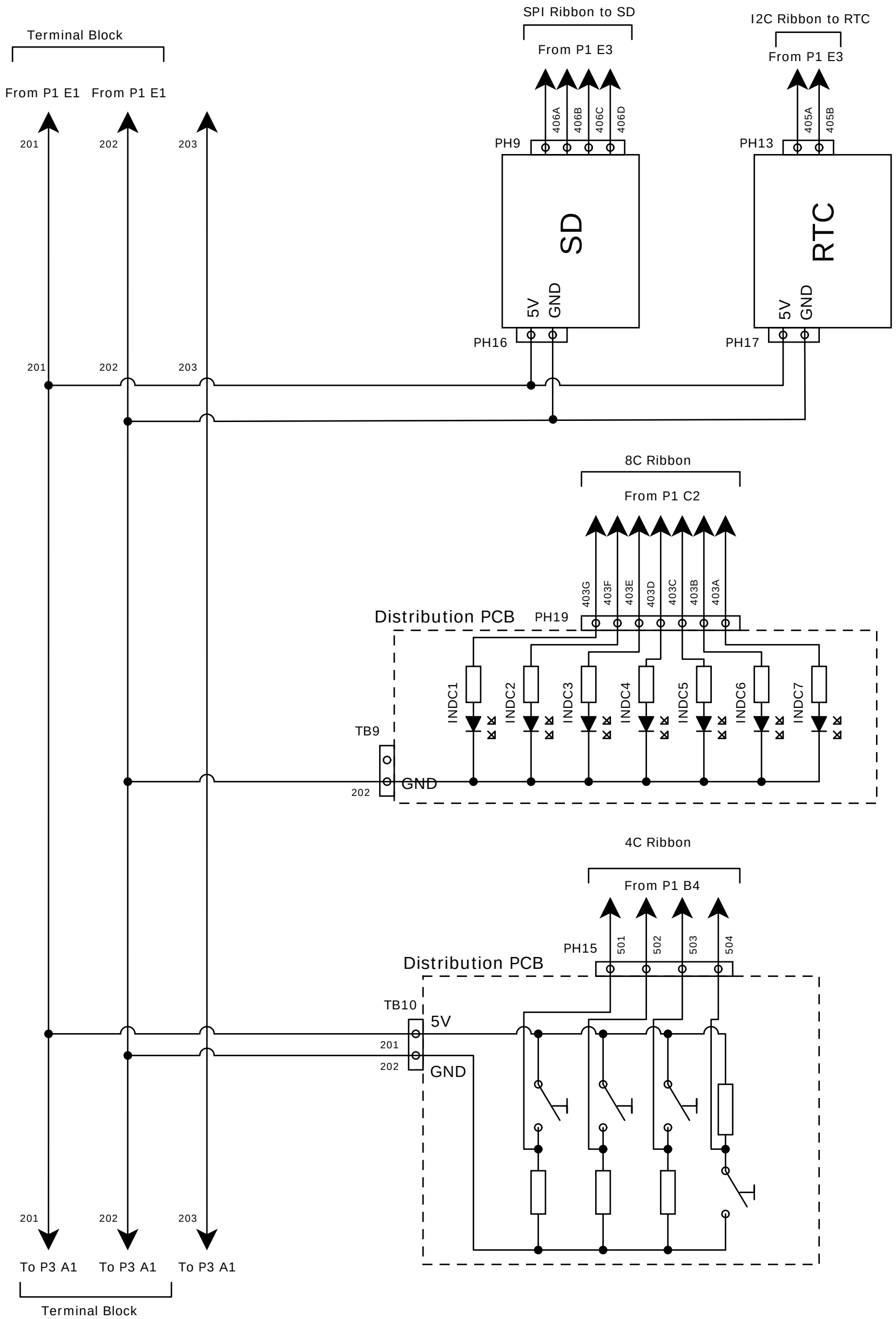

TITLE: Water Tester Wiring Diagram		REV: 3.0
	Company: Skyline MESA	Sheet: 2/3
	Date:	Drawn By: Adrian Sucahyo

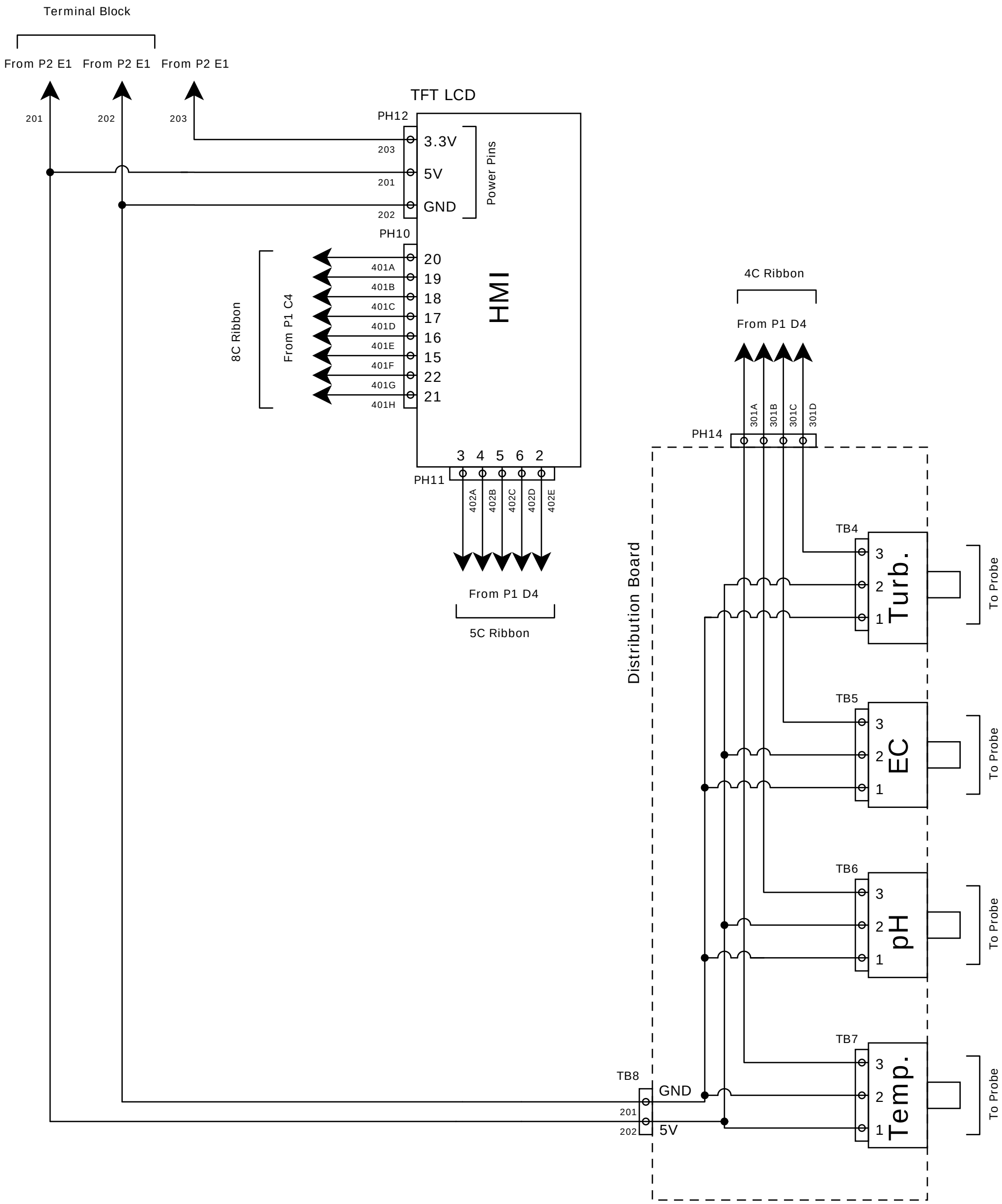

TITLE: Water Tester Wiring Diagram		REV: 3.0
	Company: Skyline MESA	Sheet: 3/3
	Date:	Drawn By: Adrian Sucahyo