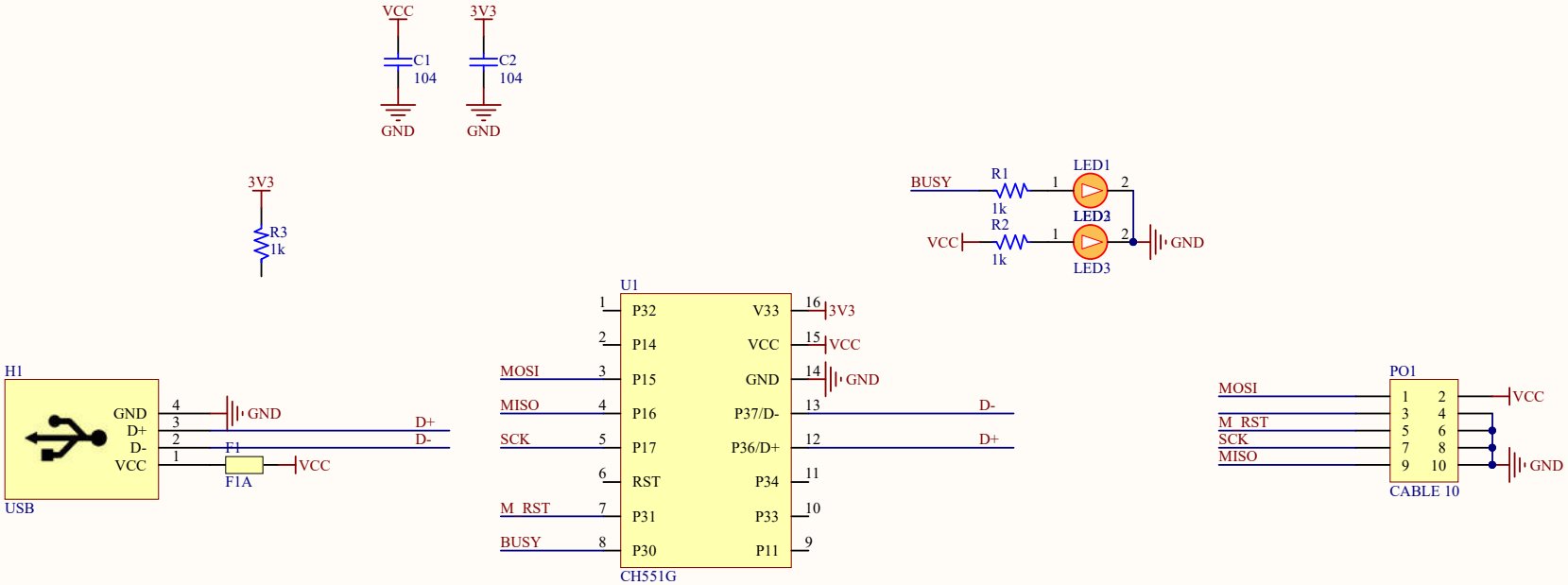


| Title | | |
|---|---|---|
| Size A4 | Number | Revision |
| Date: 10/19/2019 | | Sheet of |
| File: D:\PCB AD\CH554G\CH551G.SchDoc | | Drawn By: |