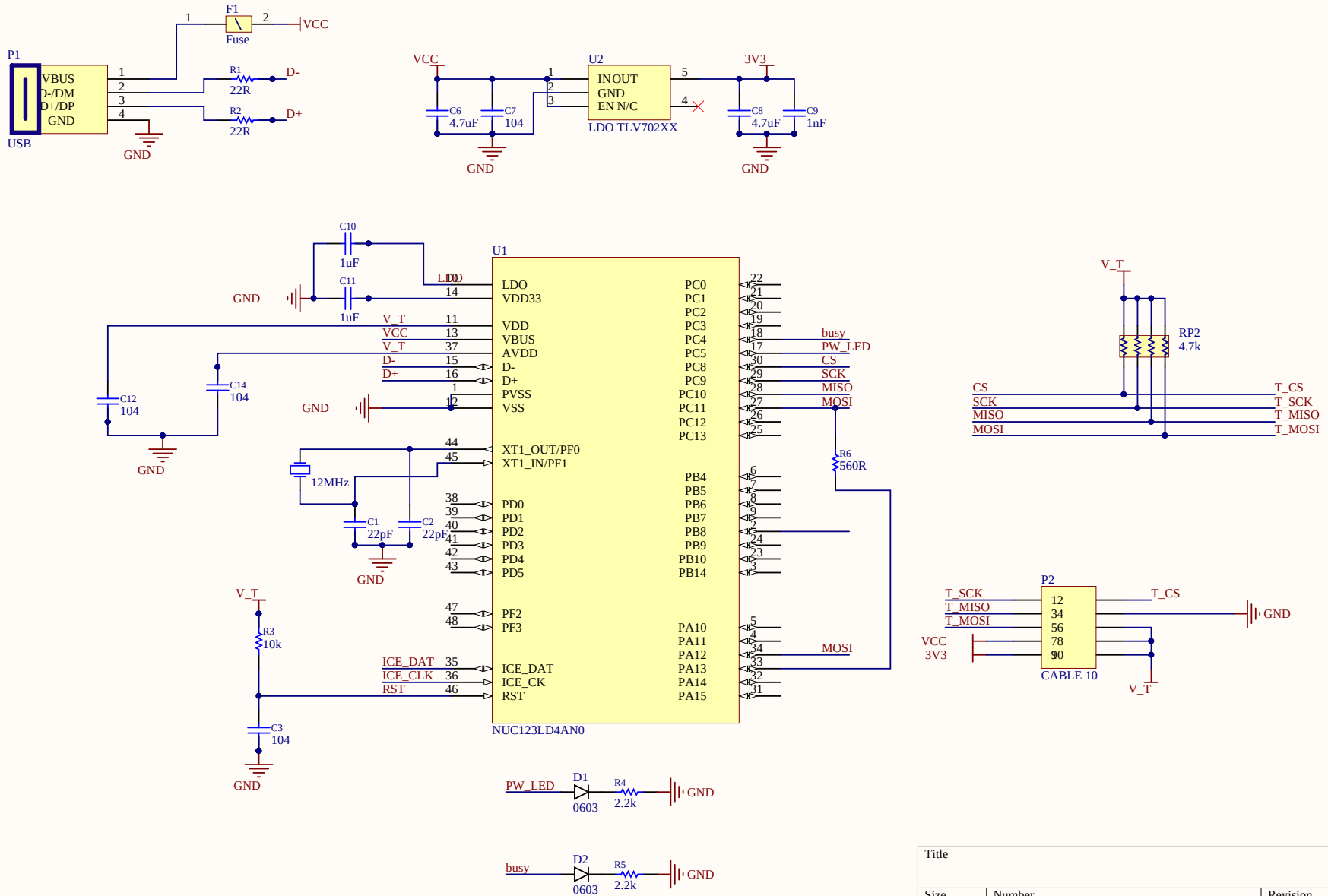

Title		
Size A4	Number	Revision
Date: 8/12/2020		Sheet of
File: D:\PCB AD\..\NUC123.SchDoc		Drawn By: