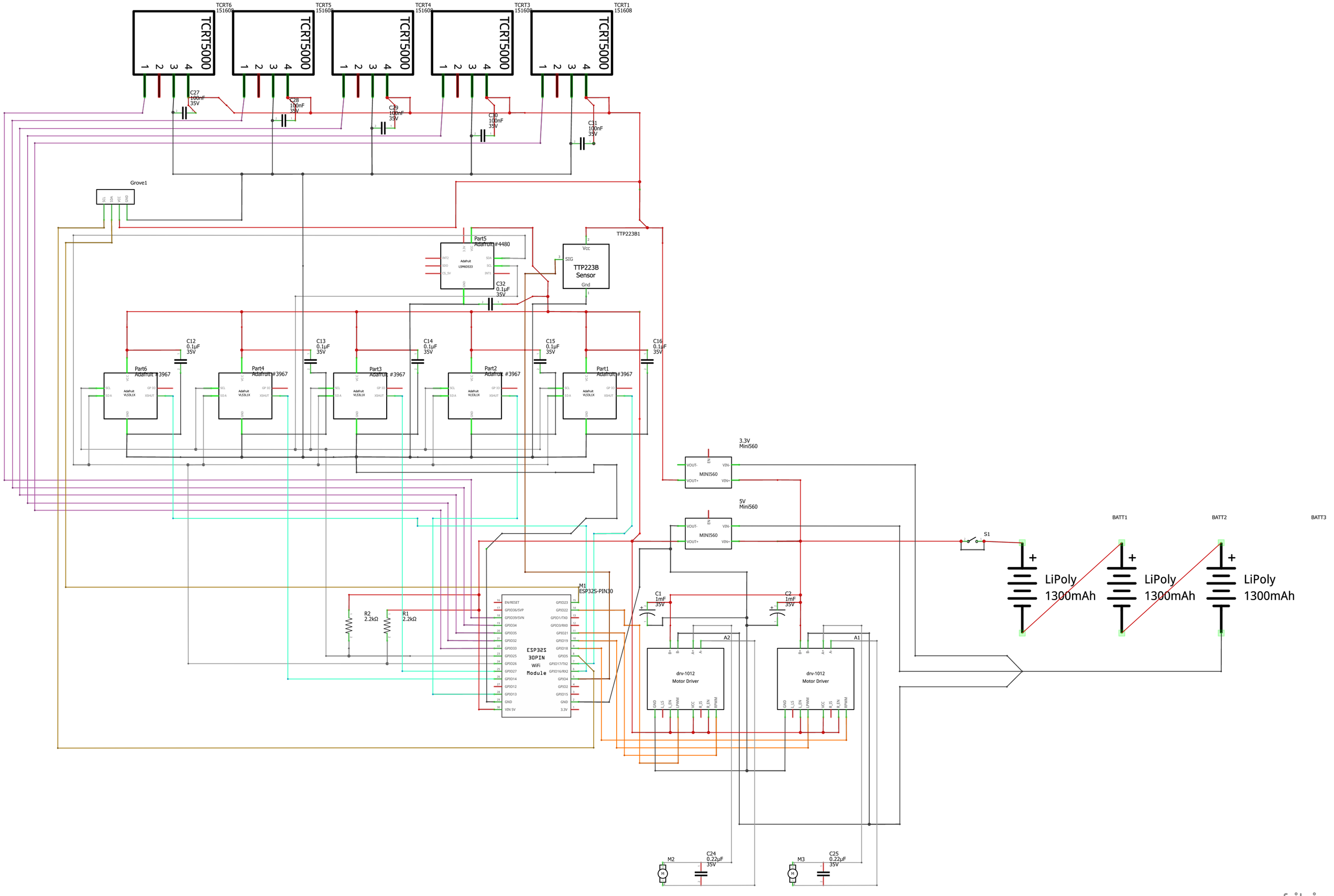
TCRT6
151608
TCRT5
151608
TCRT4
151608
TCRT3
151608
TCRT1
151608
TCRT5000
C27
100nF
35V
C28
100nF
35V
C29
100nF
35V
C30
100nF
35V
C31
100nF
35V
Grove1
SCL
SDA
VCC
GND
Part5
Adafruit #4480
C32
0.1µF
35V
TTP223B1
Vcc
SIG
TTP223B
Sensor
Gnd
C12
0.1µF
35V
C13
0.1µF
35V
C14
0.1µF
35V
C15
0.1µF
35V
C16
0.1µF
35V
Part6
Adafruit #3967
Part4
Adafruit #3967
Part3
Adafruit #3967
Part2
Adafruit #3967
Part1
Adafruit #3967
3.3V
Mini560
MINI560
5V
Mini560
MINI560
S1
BATT1
BATT2
BATT3
LiPoly
1300mAh
LiPoly
1300mAh
LiPoly
1300mAh
M1
ESP32S-PIN30
ESP32S
30PIN
WiFi
Module
R2
2.2kΩ
R1
2.2kΩ
C1
1mF
35V
C2
1mF
35V
A2
A1
drv-1012
Motor Driver
drv-1012
Motor Driver
M2
C24
0.22µF
35V
M3
C25
0.22µF
35V
fritzing