MINISTRY OF EDUCATION AND TRAINING
HO CHI MINH CITY OPEN UNIVERSITY

LÊ QUANG KHẢI

MEDICAL IMAGE CLASSIFICATION USING DEEP LEARNING

GRADUATION THESIS
COMPUTER SCIENCE

Ho Chi Minh City, April 2026

MINISTRY OF EDUCATION AND TRAINING
HO CHI MINH CITY OPEN UNIVERSITY

LÊ QUANG KHẢI - 2251010045

MEDICAL IMAGE CLASSIFICATION USING DEEP LEARNING

GRADUATION THESIS
COMPUTER SCIENCE

Advisor:
TS. LÊ VIẾT TUẤN

Ho Chi Minh City, April 2026

Advisor's comment

Adviser: TS. Lê Viết Tuấn

Acknowledgements

First and foremost, I would like to express my sincere gratitude to all professors and lecturers at Ho Chi Minh Open University, especially those in the Faculty of Information Technology. Your lectures, guidance, and encouragement have contributed greatly to my academic development and have shaped the way I approach both study and work.

I would like to express my deepest appreciation to my advisor, TS. Lê Viết Tuấn, for his invaluable support throughout this thesis. At first, I had no intention of pursuing a thesis, let alone one related to Deep Learning. To me, Machine Learning was something difficult and intimidating, and I had never seriously considered exploring it. However, during his Mobile Programming class, Mr. Tuan approached me and invited me to work on this thesis under his supervision. He saw dedication in me that I had not fully recognized in myself, and he encouraged me to take on a challenge that initially felt far beyond my comfort zone.

At that time, I was hesitant. I worried about investing such an important part of my academic journey in a topic I barely understood. However, Mr. Tuan patiently guided me, changed my perspective, and inspired me to give the field a genuine chance. What began as a reluctant decision eventually became one of the most meaningful experiences of my university life. Through this thesis on Medical Image Classification, I not only completed an important academic milestone, but also discovered a field that I truly enjoy.

Moreover, this journey opened unexpected opportunities for my future career. During the process of completing this thesis, I was fortunate enough to earn an internship position as an AI Engineer Intern at a Dutch company, which later developed into a full-time AI Engineer role. I sincerely believe that this would not have happened without Mr. Tuan's encouragement, trust, and direction. He helped me take my first step, and with his support, that first step gradually grew into a genuine passion.

I am also deeply grateful to my family for their unconditional love, patience, and support throughout my years of study. Their encouragement gave me the strength to overcome difficult moments and remain focused on my goals. In addition, I would like to thank my friends and classmates for sharing knowledge, offering support, and making my university journey more memorable.

Finally, I would like to thank everyone who, in one way or another, has supported me throughout this thesis and throughout my academic journey. This work is not only the result of my own effort, but also of the guidance, trust, and kindness that I have received from many people along the way.

Table of Content

Adviser's comment **i**

Acknowledgements **ii**

Abstract **iii**

Table of Contents **iii**

Abbreviations **iv**

1 Introduction **1**
1.1 Reasons for Choosing the Topic . . . 1
1.2 Research Problem and Objectives . . . 2
1.3 Research Scope and Methods . . . 3

2 Theoretical Background **5**
2.1 Background and Related Work . . . 5
2.1.1 Convolutional Neural Networks (CNNs) . . . 5
2.1.2 Vision Transformers (ViTs) . . . 6
2.1.3 Hybrid CNN & Transformer Models . . . 7
2.1.4 State Space Models and Mamba . . . 7
2.2 MedViT V1 Model . . . 8
2.2.1 Efficient Convolution Block (ECB) . . . 9
2.2.2 Local Transformer Block (LTB) . . . 10
2.2.3 Overall Architecture . . . 11
2.2.4 Limitations . . . 12
2.3 MedViT V2 Model . . . 12
2.3.1 Dilated Neighborhood Attention (DiNA) . . . 12
2.3.2 Global Feature Perception (GFP) and KAN Integration . . . 14
2.3.3 Overall Architecture and Hierarchical Hybrid Strategy . . . 15
2.4 MedMamba Model . . . 16
2.4.1 SS-Conv-SSM Block . . . 17
2.4.2 Limitations and the "Low-Frequency Bias" . . . 18

3 Proposed Method **19**
3.1 Motivation . . . 19
3.2 Overall Architecture of MedCobra . . . 20
3.3 LFP-Mamba Block . . . 21
3.4 Classification Head . . . 22

4 Experiments and Results **24**
4.1 Detailed Dataset Descriptions 24
4.2 Experimental Setup and Hyperparameter Rationale 25
4.2.1 Optimization and Loss Functions 25
4.2.2 Training Regimen 26
4.3 Modality-Aware Data Augmentation Strategy 26
4.4 Evaluation Metrics 28
4.5 Experimental Results 28
4.5.1 Computational Complexity and Inference Efficiency 29
4.6 Discussion and Analysis 30
4.6.1 Overcoming the SSM Low-Frequency Bias: 30
4.6.2 The Trade-off Between Transformers and SSMs: 31
4.6.3 Limitations in Ordinal Regression Tasks: 31

5 Conclusion and Future Work **32**
5.1 Conclusion 32
5.2 Limitations and Future Directions 33

References **34**

List of Abbreviations

Abbreviation	Meaning
ACC	Accuracy
AUC	Area Under the Receiver Operating Characteristic Curve
BCE	Binary Cross-Entropy
CAD	Computer-Aided Diagnosis
CE	Cross-Entropy
CNN	Convolutional Neural Network
CT	Computed Tomography
DiNA	Dilated Neighborhood Attention
ECB	Efficient Convolution Block
FLOPs	Floating-Point Operations
FPS	Frames Per Second
GFP	Global Feature Perception
GPU	Graphics Processing Unit
KAN	Kolmogorov-Arnold Network
LFFN	Local Feed-Forward Network
LFP	Local Feature Perception
LN	Layer Normalization
LTB	Local Transformer Block
MACs	Multiply-Accumulate Operations
MHCA	Multi-Head Convolutional Attention
MLP	Multi-Layer Perceptron
MRI	Magnetic Resonance Imaging
OR	Ordinal Regression
ROC	Receiver Operating Characteristic
SA	Self-Attention
SGD	Stochastic Gradient Descent
SS2D	2D Selective Scan
SSM	State Space Model
SOTA	State-of-the-Art
ViT	Vision Transformer

List of Images

2.1 The ECB block, according to [16]. 9
2.2 The LTB block, according to [16]. 10
2.3 The Overall architecture of MedViT, according to [16]. 11
2.4 The LFP block, according to [18]. 13
2.5 The GFP block, according to [18]. 14
2.6 The Overall architecture of MedViT V2, according to [18]. 15
2.7 The SS-CONV-SSM block, according to [24]. 17

3.1 Detailed architecture of the proposed MedCobra model. 20

List of Tables

4.1 Comprehensive performance comparison of MedCobra against state-of-the-art architectures and automated machine learning frameworks on MedMNIST datasets. 29
4.2 Computational complexity and inference efficiency metrics. 29

Chapter 1

Introduction

1.1 Reasons for Choosing the Topic

The precise classification of medical images is an important task in modern clinical decision-making and computer-aided diagnosis (CAD) systems. In earlier work, medical image analysis relied mainly on Convolutional Neural Networks (CNNs), which are effective at learning local image patterns. However, CNNs are limited by their local receptive fields and may struggle to capture long-range relationships across an image. Vision Transformers (ViTs) improve global context modeling, but their computational cost increases quickly with image resolution, which makes them harder to deploy in resource-constrained clinical settings.

Recently, Structured State Space Models (SSMs), especially Mamba [4], have emerged as a promising alternative. SSMs can model global information with linear computational complexity ($\mathcal{O}(N)$), which helps address the efficiency limitations of ViTs. However, recent studies suggest that Mamba-based models may show a "low-frequency bias" [8], meaning they capture smooth global structures well but may miss fine local details such as lesion boundaries and subtle textures. Existing adaptations, such as MedMamba [24], try to address this issue by adding a parallel CNN branch. Even so, standard convolutions may still be limited when subtle lesions must be separated from noisy medical backgrounds. This gap motivates the development of a hybrid architecture that combines efficient global modeling with stronger local feature extraction.

1.2 Research Problem and Objectives

Based on the identified limitations of current architectures, this thesis is guided by one central research question:

How can the integration of the Local Feature Perception (LFP) block [18], which utilizes Dilated Neighborhood Attention (DiNA) [5], be incorporated into an SSM backbone to overcome the inherent low-frequency bias, and does this novel hybrid architecture, MedCobra, improve classification accuracy and feature representation on complex medical imaging datasets compared with existing state-of-the-art baselines?

To answer this question, the thesis pursues two main objectives. First, it proposes and develops MedCobra, a hybrid neural network that replaces the standard convolution branch of MedMamba with the LFP block from MedViT V2, with the aim of improving local feature extraction while preserving global modeling. Second, it evaluates MedCobra against established baselines, such as MedMamba and ResNet, on several datasets from the MedMNIST v2 [23] collection using metrics such as AUC and Accuracy.

The subject of the research revolves around the integration of SSMs and advanced local attention mechanisms for medical image analysis. At the architectural level, this thesis focuses on the MedMamba backbone as the foundational framework because it leverages Structured SSMs to achieve linear-time scaling and effective global context modeling, thereby addressing the quadratic computational bottlenecks typically associated with traditional Vision Transformers. Building upon this foundation, the thesis examines the LFP block adopted from the MedViT V2 architecture. This enhancement module utilizes DiNA to capture fine-grained local representations, high-frequency details such as lesion edges, and complex spatial correlations, and it is strategically integrated

into the MedMamba framework to replace its conventional, less expressive convolutional layers. In addition, the empirical subject of the research consists of high-resolution, multi-modal medical imaging datasets from the MedMNIST benchmark, which provide the basis for rigorously validating the diagnostic accuracy and robustness of the proposed MedCobra model.

1.3 Research Scope and Methods

This thesis is strictly computational and algorithmic in scope. The evaluation and benchmarking are conducted exclusively on the standardized MedMNIST V2 dataset collection. Experimental simulations, model training, and evaluations are performed within Kaggle to assess the model's computational efficiency, convergence stability, and accuracy. Accordingly, this thesis focuses on secondary data analysis and architectural optimization rather than clinical trials, primary patient data collection, or physical hardware deployment in hospital systems.

To achieve the stated objectives, this thesis employs a rigorous computational research methodology comprising three interconnected phases. The first phase is literature review and theoretical analysis, in which domestic and international state-of-the-art (SOTA) methods in medical image classification are comprehensively compared to evaluate the trade-offs among CNNs, Vision Transformers, and emerging Mamba-based models. The second phase is architectural innovation, focusing on the design and development of the MedCobra model through the integration of the LFP block into the SSM-based backbone in order to balance global long-range dependency learning with local high-frequency feature extraction. The final phase is experimental validation, in which the proposed model is evaluated against established baselines on MedMNIST datasets using tailored data augmentation strategies, hyperparameter tuning, and performance

metrics such as AUC and Accuracy to verify its efficiency and robustness.

Chapter 2

Theoretical Background

2.1 Background and Related Work

The development of deep learning for medical image analysis has moved through several major stages, from convolution-based models to Transformer-based models and, more recently, to State Space Models. Because MedCobra is built on ideas from this progression, this chapter reviews the most relevant background and the key predecessor models before introducing MedViT and MedMamba in more detail.

2.1.1 Convolutional Neural Networks (CNNs)

Convolutional Neural Networks (CNNs) have long been widely used in medical image analysis because they are effective at learning local visual patterns. Earlier architectures such as Time Delay Neural Networks [21] and LeNet-5 [11] laid the foundation, while later models such as AlexNet, VGG, and ResNet made CNNs central to modern computer vision. In medical imaging, CNNs are useful because they can capture edges, textures, and morphological cues that are important for diagnosis.

Modern CNN variants have further improved efficiency and representational strength. Representative architectures such as ResNet [6] introduced residual connections to mitigate vanishing gradients, while DenseNet [9] improved infor-

mation flow through dense connectivity. Other variants, including MobileNets [7] and ConvNeXt [14], explored lightweight convolutions and more modern design principles. Despite these advantages, CNNs remain fundamentally constrained by their localized receptive fields, which makes modeling long-range spatial dependencies difficult in complex medical images where local pathological signs must often be interpreted within a broader anatomical context.

2.1.2 Vision Transformers (ViTs)

To address the local limitation of CNNs, Vision Transformers (ViTs) introduced self-attention into image recognition. By dividing an image into patches and treating them as tokens, ViTs can capture long-range relationships more effectively than standard convolutional models. This is useful in medical imaging because diagnosis often depends not only on local lesions but also on their relationship to the wider anatomical context.

Subsequent refinements improved both efficiency and practicality. The Swin Transformer [13], for instance, employed shifted windows and hierarchical feature construction to reduce the computational burden while preserving strong global reasoning. Other variants, such as PiT [25], further refined hierarchical representation learning. Although ViTs address one of the major limitations of CNNs, they also introduce a significant drawback: the self-attention mechanism scales quadratically with input resolution, making high-resolution medical imaging applications computationally demanding.

2.1.3 Hybrid CNN & Transformer Models

Because CNNs and Transformers possess complementary strengths, a major research direction has focused on hybrid architectures that combine local feature extraction with global context modeling. These models attempt to preserve the strong local inductive bias of CNNs while augmenting it with the long-range reasoning capability of Transformers. This balance is particularly important in medical image classification, where subtle lesions, fine boundaries, and broader anatomical structure must all be interpreted simultaneously.

A number of representative hybrid models have been proposed, including BoTNet [20], CvT [22], LeViT [3], and MobileViT [17], often in conjunction with lightweight convolutional backbones such as MobileNetV2 [19]. These models demonstrate that hybridization can improve efficiency and accuracy, and they provide the conceptual foundation for medical architectures such as MedViT, which explicitly targets the balance between local and global feature learning in biomedical data.

2.1.4 State Space Models and Mamba

Despite the progress of CNNs and Transformers, balancing global modeling and computational efficiency remains a major challenge. State Space Models (SSMs), especially Mamba, have recently emerged as a promising alternative because they can model long-range dependencies while scaling linearly with input length. This makes them attractive for medical imaging tasks that involve high-resolution data and efficiency constraints.

Architectures such as Vision Mamba (Vim) [26] and VMamba [12] adapt selective scan mechanisms to the visual domain in order to achieve linear complexity $O(n)$ while maintaining global context modeling. Likewise, Mamba-based frameworks such as U-Mamba [15] show that it is possible to approach the computational efficiency of CNNs without sacrificing the broad contextual reasoning commonly associated with Transformers. However, recent analyses have also shown that Mamba-based models may exhibit a low-frequency bias, meaning that they are strong at modeling global structure but weaker at preserving high-frequency local details. This limitation is particularly relevant in medical image analysis and directly motivates the architectural developments discussed in the remainder of this chapter.

2.2 MedViT V1 Model

MedViT V1 was introduced as a pioneering hybrid CNN-Transformer architecture designed specifically to tackle the complexities of medical image classification [16]. The core philosophy of MedViT rests on combining the local inductive biases of CNNs with the global connectivity of ViTs. The architecture relies on two primary building blocks: the ECB and the LTB.

2.2.1 Efficient Convolution Block (ECB)

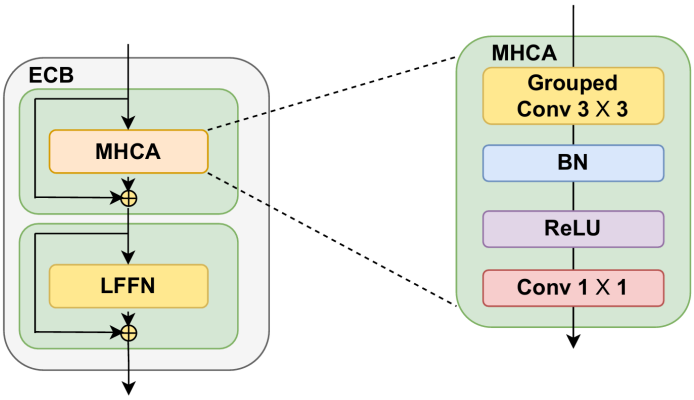

Image 2.1: The ECB block, according to [16].

The ECB is engineered to extract local, high-frequency features such as edges and fine textures. It consists of two main components. The first is MHCA, which replaces standard self-attention with point-wise and group convolutions to capture local affinities between adjacent tokens. The second is the LFFN, which preserves spatial locality by rearranging the 1D token sequence back into a 2D lattice, applying depth-wise convolutions, and then flattening it back into a sequence. Instead of relying on computationally heavy operations, the ECB efficiently processes local representations, making it a strong baseline for shallow-layer feature extraction.

2.2.2 Local Transformer Block (LTB)

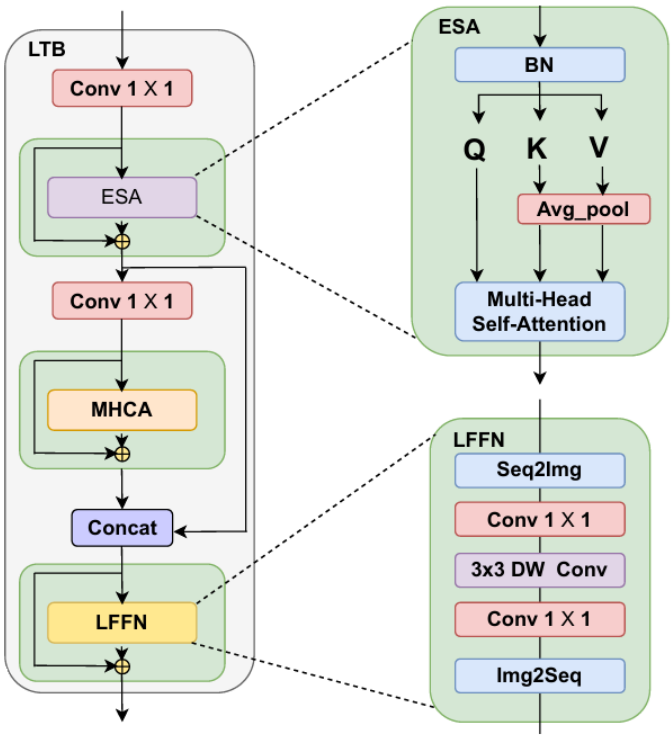

Image 2.2: The LTB block, according to [16].

While ECB focuses on local details, the LTB is designed to capture global, low-frequency contexts. The LTB utilizes an Efficient Self-Attention (ESA) mechanism to model long-range dependencies, subsequently fusing these global representations with local features (via a parallel MHCA branch) through concatenation and an LFFN refinement stage.

2.2.3 Overall Architecture

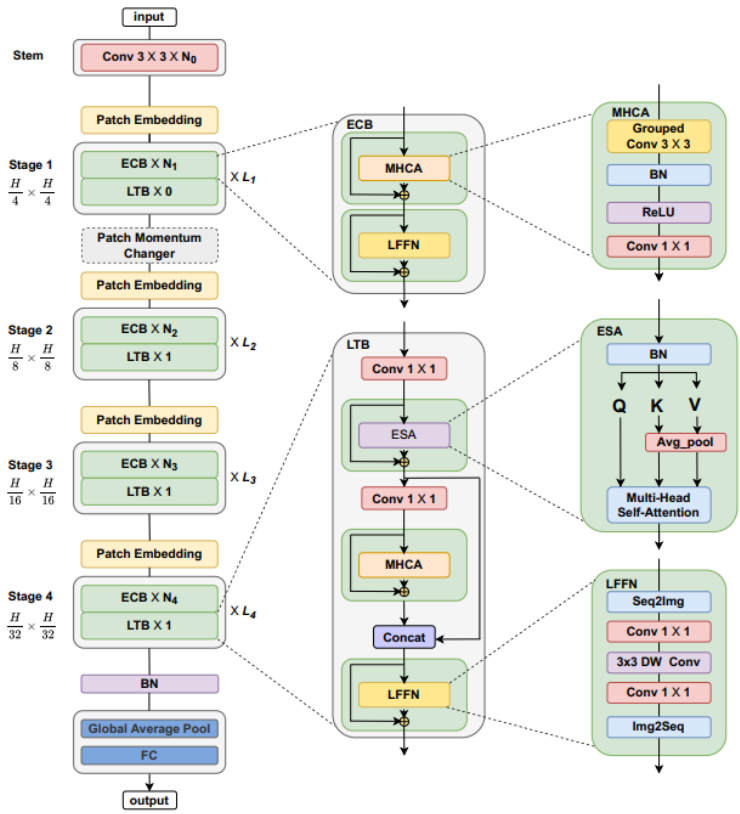

Image 2.3: The Overall architecture of MedViT, according to [16].

The overall architecture of MedViT V1 follows a hierarchical pyramid structure. It begins with a convolutional stem for initial patch embedding, followed by multiple stages. Each stage progressively reduces the spatial resolution of the feature maps (by a factor of 32× across all stages) while doubling the channel dimensions. Typically, early stages solely employ ECB blocks to extract local representations, whereas deeper stages stack LTB blocks to capture broader semantic concepts.

2.2.4 Limitations

Despite its strong baseline performance, MedViT V1 exhibits a critical architectural limitation known as "Feature Collapse" when deployed on complex, high-resolution medical datasets or when scaling up the model size [18]. The Convolutional Attention (CA) mechanism within the MHCA relies on fixed, static convolutional weights. As the network depth or parameter count increases, these feature maps tend to become saturated or inactive, losing their representational diversity. Furthermore, the reliance on self-attention within the LTB still incurs a considerable computational bottleneck compared to linear-time sequence models. These limitations necessitate a fundamental redesign of the local feature perception mechanism, which led to the development of MedViT V2 [18].

2.3 MedViT V2 Model

To address the limitations of the original MedViT, particularly the issue of "feature collapse" where feature maps become saturated or inactive when scaling up the model, MedViT V2 introduces significant architectural advancements. The framework redesigns the feature perception modules by integrating DiNA and KAN to support large-scale training and enhance expressiveness.

2.3.1 Dilated Neighborhood Attention (DiNA)

While the MHCA in MedViT V1 captures local high-frequency features, it may suffer from feature saturation on complex medical datasets. To address this, MedViT V2 adapts DiNA. DiNA is a sparse global attention mechanism that

localizes self-attention to the nearest neighboring pixels based on a dilation factor δ. Operating within overlapping shifted windows, DiNA preserves translation equivariance while maintaining linear time and space complexity. Crucially, this sliding window pattern allows the model to exponentially expand its receptive field without incurring additional computational costs, thereby mitigating the feature collapse issue.

Local Feature Perception (LFP) Block

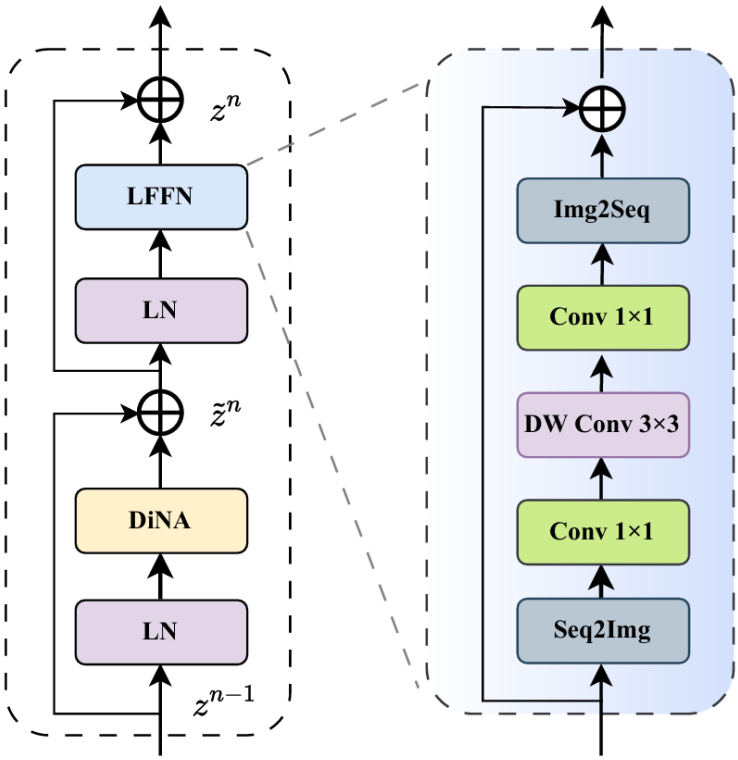

Image 2.4: The LFP block, according to [18].

In MedViT V2, the ECB is upgraded to the LFP block to better balance local and global feature learning. The LFP block explicitly replaces the standard Convolutional Attention with the DiNA mechanism.

The LFP block is a collaborative operation between DiNA and LFFN to capture both local and global features within the input data. For the n-th block of LFP, the mathematical formulation is as follows:

$$\tilde{z}^n = \text{DiNA}(\text{LN}(z^{n-1})) + z^{n-1} \tag{2.1}$$

$$z^n = \text{LFFN}(\text{LN}(\tilde{z}^n)) + \tilde{z}^n \tag{2.2}$$

In the provided equations, z^{n-1} undergoes Layer Normalization (LN) before entering the DiNA module. Also, $\tilde{z}^n$ and z^n denote the output of DiNA and Local Feed-Forward Network (LFFN) for the n-th block of LFP, respectively. The LFFN is retained from V1 as it demonstrates strong capabilities in generating robust features against image artifacts and distribution shifts.

2.3.2 Global Feature Perception (GFP) and KAN Integration

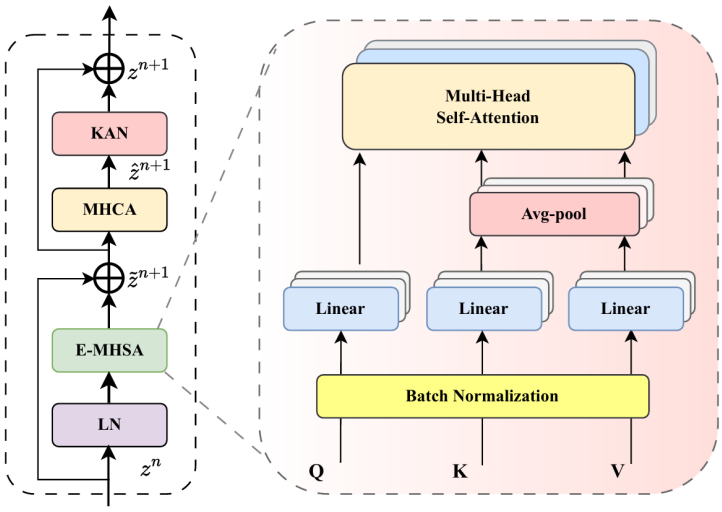

Image 2.5: The GFP block, according to [18].

To complement the LFP block, the LTB is evolved into the GFP block. A major innovation within the GFP is the replacement of traditional Multi-Layer Perceptrons (MLPs) with Kolmogorov-Arnold Networks (KANs). Unlike standard MLPs that apply non-linear activations at the nodes, KANs apply learnable non-linear functions directly on the edges (the mappings from inputs to outputs). This functional decomposition allows the network to effectively separate true pathological signals from background noise using simpler functional modules. Consequently, the integration of KAN reduces the computational complexity of the model by 44% compared to V1, while significantly enhancing its accuracy and generalization across diverse medical imaging modalities.

2.3.3 Overall Architecture and Hierarchical Hybrid Strategy

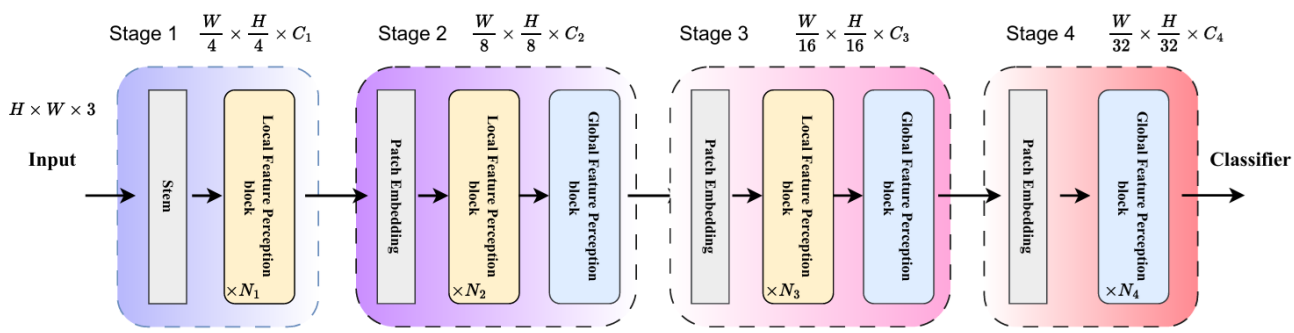

Image 2.6: The Overall architecture of MedViT V2, according to [18].

Building upon the foundational hierarchical pyramid structure of MedViT V1, the overall architecture of MedViT V2 introduces a novel Hierarchical Hybrid Strategy to reorganize its core modules. As previously described, MedViT V1 predominantly employs local feature extractors (ECB) in its early stages and

restricts global extractors (LTB) to deeper stages. This conventional placement often struggles to capture global contextual information effectively in the shallow layers.

To overcome this limitation, MedViT V2 systematically integrates both local and global perception across all stages. Instead of isolating Transformer-based blocks at the terminal end of the network, each stage in V2 (except the first) incorporates a repeating pattern of N LFP blocks followed seamlessly by one GFP block. This structural evolution ensures that both high-frequency detailed features (via LFP) and low-frequency global semantics (via GFP) are continuously extracted and effectively fused from the very shallow layers through to the deep layers.

2.4 MedMamba Model

MedMamba is the first Vision Mamba architecture specifically designed for generalized medical image classification. It was created to overcome the inherent limitations of the two dominant deep learning architectures: CNNs, which struggle to model long-range dependencies due to their local receptive fields, and ViTs, which suffer from high quadratic computational complexity making them difficult to deploy in resource-constrained clinical settings

2.4.1 SS-Conv-SSM Block

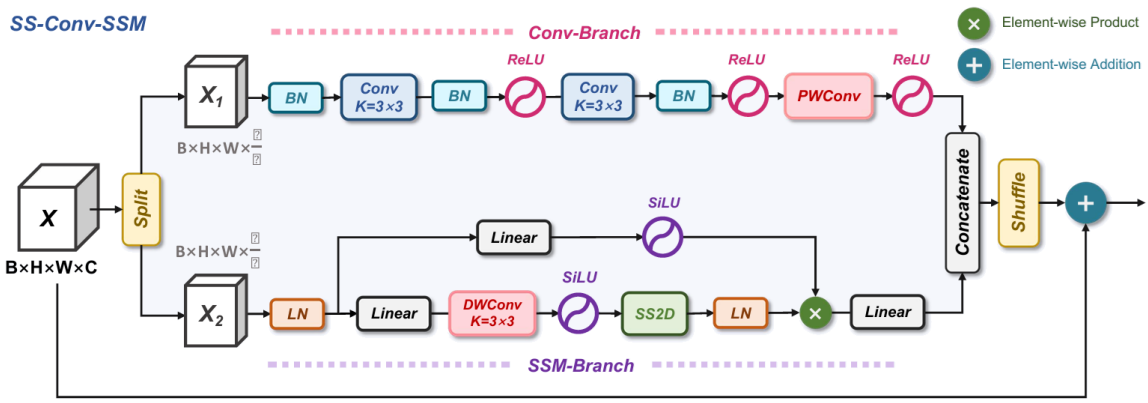

Image 2.7: The SS-CONV-SSM block, according to [24].

The core innovation of MedMamba lies in its fundamental building block: the SS-Conv-SSM module. Recognizing that medical images possess both complex global anatomical structures and critical local lesions, the authors designed a dual-branch architecture to capture features at different granularities simultaneously. The input feature map is first split along the channel dimension. One half is processed through a standard convolutional pathway, using depth-wise and point-wise convolutions to extract local spatial features and short-range patterns. The other half is fed into a 2D Selective Scan (SS2D) module. Because standard SSMs are designed for 1D sequences, the SS2D mechanism unfolds the 2D feature map into four distinct 1D sequences, scanning from top-left to bottom-right and vice versa in both horizontal and vertical directions. These sequences are then processed in parallel by the Mamba algorithm to capture long-range global dependencies with linear complexity $O(N)$ before being merged back into a 2D spatial format. Finally, the outputs from both branches are con-

catenated and subjected to a channel-shuffle operation to facilitate cross-channel information exchange.

2.4.2 Limitations and the "Low-Frequency Bias"

Despite its efficiency and strong baseline performance, recent studies analyzing the frequency domain characteristics of SSMs reveal a critical limitation: Mamba inherently acts as a low-pass filter [8]. This "low-frequency bias" means that while the SSM branch is highly effective at capturing overall morphological structures and smooth regions (low-frequency components), it exhibits a fundamental weakness in modeling high-frequency visual information, such as abrupt edges, fine textures, and tiny lesion boundaries.

Chapter 3

Proposed Method

3.1 Motivation

Although SSM-based models such as MedMamba are efficient and effective at modeling global context through the 2D Selective Scan (SS2D) mechanism, they may be less effective at capturing very fine local details. In practice, this means the SSM branch can represent broad anatomical structure well but may miss high-frequency patterns such as lesion boundaries, micro-calcifications, and abrupt edges.

To compensate for this limitation, the original MedMamba architecture uses a parallel convolution branch. However, standard convolutions may still be limited when subtle pathological patterns must be separated from complex medical backgrounds, especially in high-resolution images.

To address these limitations, this thesis proposes MedCobra, a hybrid architecture that replaces the standard convolution branch of MedMamba with the LFP block from MedViT V2. By using DiNA, the LFP block improves local feature extraction without introducing the quadratic cost of full self-attention. In this design, the SSM branch focuses on global context, while the LFP branch focuses on fine local details.

3.2 Overall Architecture of MedCobra

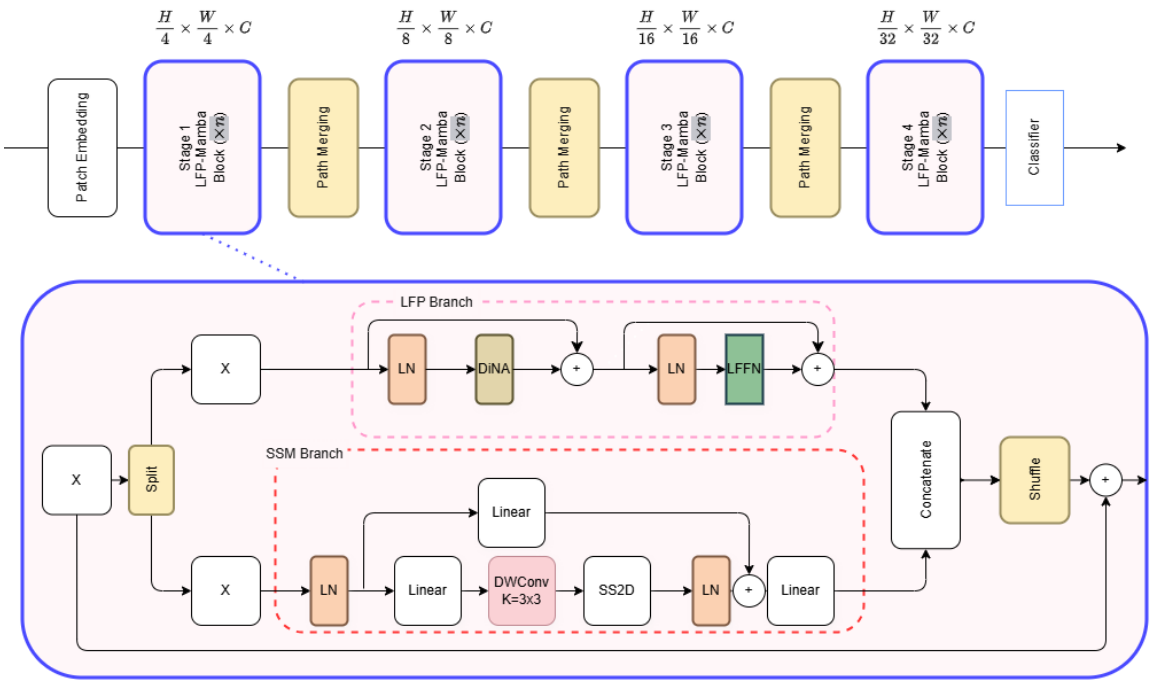

Image 3.1: Detailed architecture of the proposed MedCobra model.
Note: The overall diagram is adapted from the MedMamba architecture [24]. The core improvement resides within each SS-Cobra-SSM block, where the original Conv branch is replaced by the LFP branch integrated from the MedViT V2 architecture [18].

The overall architecture of MedCobra follows a hierarchical pyramid structure so that it can learn features at multiple scales. This design is useful for both classification and other vision tasks that require information from different levels of detail.

Given an input medical image $X \in \mathbb{R}^{H \times W \times 3}$, the model first utilizes a Patch Embedding module (Stem) consisting of convolutional layers to partition the image into non-overlapping patches. This operation downsamples the spatial resolution by a factor of 4× and projects the patches into an initial channel dimension C.

After the stem, the feature maps pass through four hierarchical stages. At the beginning of Stages 2, 3, and 4, a Patch Merging layer reduces the spatial resolution while increasing the channel dimension. The main feature extraction at each stage is performed by stacked LFP-Mamba blocks, which combine global dependencies with local high-frequency details.

3.3 LFP-Mamba Block

The LFP-Mamba block is the main architectural contribution of MedCobra. It replaces the original SS-Conv-SSM block of MedMamba. To extract global and local information efficiently, the input tensor is divided into two parallel branches.

Given an input feature map $X_{in} \in \mathbb{R}^{B \times C \times H \times W}$, it is first divided into two halves along the channel dimension:

$$X_1, X_2 = \text{Split}(X_{in}, \text{dim} = C) \tag{3.1}$$

where $X_1, X_2 \in \mathbb{R}^{B \times (C/2) \times H \times W}$.

Global State Space Modeling (SSM Branch). The first half, X_1, is sent to the SSM branch to capture long-range global dependencies. The 2D feature map is flattened and processed by the SS2D module, which scans the sequence in four directions. This design helps the model capture broader spatial context while maintaining linear complexity $\mathcal{O}(N)$:

$$Y_1 = \text{SS2D}(\text{LN}(X_1)) \tag{3.2}$$

Local Feature Perception (LFP Branch). The second half, X_2, is sent to the LFP block to capture local textures and lesion boundaries. Using DiNA, this branch expands the receptive field while still focusing on nearby informative patterns. The process is formulated as:

$$\tilde{Z}_2 = \text{DiNA}(\text{LN}(X_2)) + X_2 \tag{3.3}$$

$$Y_2 = \text{LFFN}(\text{LN}(\tilde{Z}_2)) + \tilde{Z}_2 \tag{3.4}$$

where LN denotes Layer Normalization, and LFFN represents the Local Feed-Forward Network, which provides robustness against medical image artifacts.

Feature Fusion (Concatenation and Shuffle). After both branches are processed, the global features (Y_1) and local features (Y_2) are concatenated along the channel dimension. A channel shuffle operation, or equivalently a 1×1 point-wise convolution, is then applied to mix the information across channels. Finally, a residual connection is added to produce the output of the block:

$$Y_{out} = \text{Conv}_{1\times1}(\text{Concat}(Y_1, Y_2)) + X_{in} \tag{3.5}$$

3.4 Classification Head

After passing through the four hierarchical stages, the spatial dimensions of the feature maps are maximally reduced while possessing rich, high-level semantic channels. The final representation is processed by a Global Average Pooling (GAP) layer, which aggregates the spatial information into a single 1D feature vector.

Finally, this vector is passed through a fully connected (linear) layer followed by a softmax activation function (or a sigmoid function for binary classification tasks) to produce the final disease-class probabilities:

$$\hat{y} = \text{Softmax}(W_{\text{cls}} \cdot \text{GAP}(Y_{\text{final}})) \tag{3.6}$$

Chapter 4

Experiments and Results

4.1 Detailed Dataset Descriptions

To evaluate the generalization ability and robustness of MedCobra, we conducted experiments on five 2D medical imaging datasets from the MedMNIST v2 benchmark [23]. These datasets cover different imaging modalities, clinical tasks, and dataset sizes, which makes them suitable for a broad evaluation.

BreastMNIST is compiled from a dataset of 780 breast ultrasound images. Originally categorized into three classes (normal, benign, and malignant), the task is simplified into binary classification by combining normal and benign images into a positive class against malignant as the negative class. Because ultrasound images are notoriously difficult due to low contrast and speckle noise, this dataset is particularly suitable for testing the model's ability to extract high-frequency boundary features.

PneumoniaMNIST is based on a dataset of 5,856 pediatric chest X-ray images and is formulated as a binary classification task that distinguishes between pneumonia and normal cases. This dataset tests the model's capacity to identify widespread, cloudy opacities in radiological scans.

DermaMNIST is derived from the HAM10000 dataset and contains 10,015 images for the multi-class classification of seven skin lesion categories, such as melanoma and basal cell carcinoma. Its strong class imbalance provides a rigor-

ous test of the model's feature representation under skewed class distributions. BloodMNIST is compiled from 17,092 normal blood cell images captured via microscopy for an 8-class classification task. Unlike radiological images, these images contain well-centered subjects in which morphological scale, such as overall cell size and nucleus shape, serves as the primary diagnostic biomarker. RetinaMNIST is sourced from the DeepDRiD dataset and provides 1,600 fundus images. It is structured as an ordinal regression task that classifies the severity of diabetic retinopathy into five distinct sequential levels, from 0 to 4.

4.2 Experimental Setup and Hyperparameter Rationale

The proposed MedCobra model was implemented in PyTorch and trained in a cloud-based Kaggle GPU environment. To ensure optimal convergence and prevent overfitting, the training hyperparameters were meticulously selected based on the architectural characteristics of hybrid State Space Models.

4.2.1 Optimization and Loss Functions

The network was optimized using the AdamW optimizer with an initial learning rate of 1×10^{-3} and a weight decay of 1×10^{-4}. AdamW was specifically chosen over standard SGD because it decouples weight decay from the gradient update, providing superior regularization, which is a crucial requirement when training complex attention-based modules (like the DiNA mechanism) on limited medical data. A Cosine Annealing learning rate scheduler was employed to smoothly decay the learning rate, allowing the model to escape local minima in the early

stages and converge stably.

Based on our unified training pipeline, we strictly utilized the standard Cross-Entropy (CE) Loss as the objective function for all datasets. Instead of utilizing Binary Cross-Entropy (BCE) for binary datasets (e.g., BreastMNIST and PneumoniaMNIST), we formulated them holistically as 2-class multi-class problems. During the evaluation phase, the raw output logits generated by the model were explicitly passed through a Softmax activation function (dim = 1) rather than a Sigmoid function to compute the final continuous probability distributions.

4.2.2 Training Regimen

The models were trained for a maximum of 100 epochs with a batch size of 32. During the training loop, gradients were iteratively optimized, and the scalar loss was systematically logged per iteration to monitor the model's convergence behavior. The continuous probability predictions ($y_$score) were aggregated across batches and passed to a standardized evaluator to rigorously compute the AUC and Accuracy metrics. Furthermore, to strictly prevent overfitting, an Early Stopping strategy with a patience of 25 epochs was implemented, halting the training process if the validation AUC ceased to improve.

4.3 Modality-Aware Data Augmentation Strategy

Medical datasets are inherently limited in size. To improve generalization, data augmentation was applied during training. Because medical datasets differ substantially across modalities, a dataset-specific augmentation strategy was used

instead of a single common pipeline.

For macroscopic and radiological datasets (PneumoniaMNIST, BreastMNIST, DermaMNIST), spatial and photometric augmentations including Random Resized Crop (scale factor between 0.7 and 1.0) and Random Horizontal Flip (p=0.5) were extensively utilized. These transformations simulate the natural variations in patient positioning and organ scale, forcing the MedCobra model to rely on pathological textures rather than memorizing spatial coordinates.

During the empirical evaluation of the BloodMNIST dataset, a severe degradation in model performance was observed when applying general-purpose spatial augmentations. Specifically, the introduction of Random Resized Crop caused the classification accuracy to plummet drastically from $\sim$96% to approximately 7%.

This severe performance drop is directly attributed to the destruction of critical morphological features inherent to peripheral blood cells. In hematological image analysis, the accurate classification of cell types relies heavily on definitive biological markers, most notably the overall cell size and the nucleus-to-cytoplasm ratio. The Random Resized Crop operation arbitrarily extracts sub-regions and upscales them to the target resolution (224×224). This geometric transformation induces two major detrimental effects: first, it truncates essential structural boundaries, often omitting the nucleus entirely; second, it artificially distorts the scale of the cells, effectively causing naturally small cells (e.g., lymphocytes) to appear morphologically identical to larger cells (e.g., monocytes).

This phenomenon strongly underscores that for microscopy-based datasets, data augmentation strategies must be strictly scale-preserving and orientation-agnostic (utilizing only rigid transformations such as random rotations and flips) to maintain the diagnostic integrity of the medical images.

4.4 Evaluation Metrics

Following the standard MedMNIST evaluation protocol [23], we report the Area Under the ROC Curve (AUC) and Accuracy (ACC) as the primary predictive evaluation metrics. While Accuracy calculates the raw ratio of correct predictions, AUC is a threshold-independent metric that measures the model's ability to distinguish between classes. AUC is particularly emphasized in our analysis as it provides a much more robust performance measure on highly imbalanced medical datasets. In addition to these predictive metrics, this thesis also evaluates computational efficiency using the number of parameters, FLOPs, MACs, and average inference time per image, since practical clinical deployment requires not only strong diagnostic accuracy but also feasible runtime performance.

4.5 Experimental Results

Table 4.1 presents a comprehensive benchmarking of the proposed MedCobra against representative models from three distinct architectural paradigms: pure CNNs (ResNet-18/50), Vision Transformers (MedViT-T), and State Space Models (MedMamba-T).

Methods	BreastMNIST		PneumoniaMNIST		DermaMNIST		BloodMNIST		RetinaMNIST	
	AUC	**ACC**	**AUC**	**ACC**	**AUC**	**ACC**	**AUC**	**ACC**	**AUC**	**ACC**
ResNet-18 [6]	0.891	0.833	0.956	0.864	0.920	0.754	0.998	0.963	0.710	0.493
ResNet-50 [6]	0.866	0.842	0.962	0.884	0.912	0.731	0.997	0.950	0.716	0.511
Autosk-learn [2]	0.871	0.846	0.957	0.864	0.914	0.713	0.997	0.952	0.716	0.493
AutoKeras [10]	0.901	0.840	0.991	0.941	0.916	0.743	0.997	0.958	0.724	0.522
Google AutoML [1]	0.908	0.854	0.990	0.941	0.915	0.743	0.998	0.963	0.742	0.526
MedViT-T [16]	0.934	0.896	0.993	0.949	0.914	0.768	0.996	0.950	0.752	0.534
MedMamba-T (Baseline) [24]	0.825	0.853	0.965	0.899	0.917	0.779	0.999	0.978	0.747	0.543
MedCobra (Ours)	0.857	0.859	0.974	0.901	0.936	0.769	0.999	0.975	0.719	0.527

Table 4.1: Comprehensive performance comparison of MedCobra against state-of-the-art architectures and automated machine learning frameworks on MedMNIST datasets.

4.5.1 Computational Complexity and Inference Efficiency

In medical imaging, deploying models to resource-constrained clinical environments requires a careful balance between diagnostic accuracy, computational complexity (FLOPs), and real-time inference capability. During the evaluation phase, we systematically profiled the computational footprint of the baseline and our proposed architecture.

Table 4.2 details the computational complexity of the baseline MedMamba-T and the proposed MedCobra architecture, measured over 200 inference runs with a batch size of 1.

Model	Parameters (M)	FLOPs (G)	MACs (G)	Inference Time (ms/image)
MedMamba-T (Baseline)	14.454	4.049	2.024	16.041 ± 0.568
MedCobra (Ours)	16.919	**2.539**	**1.269**	28.395 ± 0.802

Table 4.2: Computational complexity and inference efficiency metrics.

The profiling results show a clear architectural trade-off. By replacing the standard convolutional branch with the DiNA-based LFP block, MedCobra incurs a marginal increase in trainable parameters (+2.46M). However, it achieves a drastic 37.3% reduction in theoretical computational complexity, dropping from

4.049 GFLOPs to 2.539 GFLOPs. This confirms the mathematical efficiency of the Dilated Neighborhood Attention mechanism compared to dense convolutions.

While the theoretical FLOPs are significantly lower, the actual inference latency of MedCobra (28.40 ms/image) is slightly higher than the baseline (16.04 ms/image). One likely reason is that attention-based operations may incur higher memory-access overhead during actual GPU execution than their theoretical FLOP count suggests. Nevertheless, an inference time of 28.40 ms corresponds to a processing speed of approximately 35 frames per second (FPS). This seamlessly satisfies the stringent requirements for real-time video processing (e.g., live ultrasound scanning) in clinical computer-aided diagnosis systems.

4.6 Discussion and Analysis

The results suggest several important observations about the architecture and its practical behavior:

4.6.1 Overcoming the SSM Low-Frequency Bias:

Among SSM-based models, MedCobra significantly outperforms MedMamba-T on datasets requiring high-frequency detail perception, such as BreastMNIST (+0.032 AUC) and PneumoniaMNIST (+0.009 AUC). Notably, on the highly imbalanced DermaMNIST dataset, MedCobra achieves an outstanding AUC of 0.936, surpassing both the MedMamba baseline (0.917) and the CNN/Transformer baselines. This suggests that replacing the standard convolution branch with the

DiNA-based LFP block helps the model capture finer local details, especially on datasets where lesion boundaries are important.

4.6.2 The Trade-off Between Transformers and SSMs:

While the Transformer-based MedViT-T achieves higher metrics on certain datasets (e.g., BreastMNIST), it relies heavily on the self-attention mechanism, which inherently suffers from quadratic computational complexity $\mathcal{O}(N^2)$. In contrast, MedCobra leverages the Mamba backbone to maintain linear computational complexity $\mathcal{O}(N)$. Therefore, MedCobra establishes a highly favorable trade-off: it drastically closes the performance gap with heavy Vision Transformers while preserving the linear-complexity design advantages of SSM-based architectures, albeit with higher practical inference latency than the MedMamba baseline.

4.6.3 Limitations in Ordinal Regression Tasks:

The underperformance of all models on the RetinaMNIST dataset (AUC ranging from 0.710 to 0.752) underscores a critical limitation of the current training regime. RetinaMNIST is an ordinal regression task (grading Diabetic Retinopathy from level 0 to 4), yet all evaluated architectures optimize a standard cross-entropy loss. Standard CE loss treats each severity level as an independent class, ignoring the continuous progression of the disease. The heightened sensitivity of the LFP block in MedCobra might amplify local textural noise without ordinal constraints. This suggests that an ordinal loss function may be more suitable for grading tasks in future work.

Chapter 5

Conclusion and Future Work

5.1 Conclusion

The precise classification of medical images requires an architecture capable of simultaneously capturing broad anatomical contexts and fine-grained pathological details. While SSMs, such as Mamba, have introduced linear-time efficiency for global modeling, this thesis identifies and addresses their inherent "low-frequency bias" - a critical limitation that hinders the extraction of sharp, high-frequency local features like lesion boundaries.

To overcome this, we proposed MedCobra, a novel hybrid neural network architecture. By structurally replacing the simplistic convolutional branch of the baseline MedMamba with the highly expressive LFP block from MedViT V2, MedCobra successfully integrates the global receptive field of SSMs with the dynamic, high-frequency focus of DiNA.

Experiments on five datasets from the MedMNIST v2 benchmark showed that the proposed method is effective. In particular, MedCobra improved AUC over the MedMamba baseline on BreastMNIST (0.857), PneumoniaMNIST (0.974), and DermaMNIST (0.936), which are datasets where local detail is especially important. In addition, MedCobra preserved the linear computational structure of the Mamba backbone and reduced theoretical FLOPs, although its practical inference time remained higher than that of MedMamba. Overall, this thesis

presents a scalable framework that may improve the usefulness of SSM-based models in resource-constrained clinical settings.

5.2 Limitations and Future Directions

Despite the promising results, this thesis acknowledges certain limitations that pave the way for future research. First, although MedCobra reduces theoretical computational complexity, its practical inference latency remains higher than the MedMamba baseline due to the memory-access overhead of attention-based operations. Future work will therefore focus on optimizing runtime efficiency through kernel-level implementation improvements, operator fusion, memory-access optimization, and lightweight architectural refinements so that the model can better satisfy strict real-time clinical deployment requirements.

Second, this thesis already adopts different augmentation strategies for different datasets, and the experimental findings show that augmentation effectiveness is strongly modality-dependent. In particular, transformations that are beneficial for radiological or macroscopic images may be harmful for microscopy-based data, as demonstrated by the severe performance degradation on BloodMNIST when inappropriate cropping is applied. Future work will therefore focus on refining dataset-specific augmentation pipelines and conducting more systematic hyperparameter tuning to further improve robustness and generalization across heterogeneous medical imaging modalities.

References

English

[1] Bisong, Ekaba et al. *Building machine learning and deep learning models on Google cloud platform*. Springer, 2019.

[2] Feurer, Matthias et al. "Efficient and robust automated machine learning". In: *Advances in neural information processing systems* 28 (2015).

[3] Graham, Ben et al. *LeViT: a Vision Transformer in ConvNet's Clothing for Faster Inference*. 2021. arXiv: 2104.01136 [cs.CV]. URL: https://arxiv.org/abs/2104.01136.

[4] Gu, Albert and Dao, Tri. "Mamba: Linear-Time Sequence Modeling with Selective State Spaces". In: (2024). arXiv: 2312.00752 [cs.LG]. URL: https://arxiv.org/abs/2312.00752.

[5] Hassani, Ali et al. "Neighborhood Attention Transformer". In: (2023). arXiv: 2204.07143 [cs.CV]. URL: https://arxiv.org/abs/2204.07143.

[6] He, Kaiming et al. "Deep Residual Learning for Image Recognition". In: (2015). arXiv: 1512.03385 [cs.CV]. URL: https://arxiv.org/abs/1512.03385.

[7] Howard, Andrew G. et al. *MobileNets: Efficient Convolutional Neural Networks for Mobile Vision Applications*. 2017. arXiv: 1704.04861 [cs.CV]. URL: https://arxiv.org/abs/1704.04861.

[8] Huang, Bingquan et al. "InceptionMamba: A Lightweight and Effective Model for Medical Image Classification Revealing Mamba's Low-Frequency Bias". In: *Neural Processing Letters* 58.1 (2026), p. 15.

[9] Huang, Gao et al. "Densely Connected Convolutional Networks". In: (2018). arXiv: 1608.06993 [cs.CV]. URL: https://arxiv.org/abs/1608.06993.

[10] Jin, Haifeng, Song, Qingquan, and Hu, Xia. "Auto-keras: An efficient neural architecture search system". In: *Proceedings of the 25th ACM SIGKDD international conference on knowledge discovery & data mining*. 2019, pp. 1946–1956.

[11] LeCun, Yann et al. "Gradient-based learning applied to document recognition". In: *Proceedings of the IEEE* 86.11 (2002), pp. 2278–2324.

[12] Liu, Yue et al. *VMamba: Visual State Space Model*. 2024. arXiv: 2401.10166 [cs.CV]. URL: https://arxiv.org/abs/2401.10166.

[13] Liu, Ze et al. *Swin Transformer: Hierarchical Vision Transformer using Shifted Windows*. 2021. arXiv: 2103.14030 [cs.CV]. URL: https://arxiv.org/abs/2103.14030.

[14] Liu, Zhuang et al. *A ConvNet for the 2020s*. 2022. arXiv: 2201.03545 [cs.CV]. URL: https://arxiv.org/abs/2201.03545.

[15] Ma, Jun, Li, Feifei, and Wang, Bo. *U-Mamba: Enhancing Long-range Dependency for Biomedical Image Segmentation*. 2024. arXiv: 2401.04722 [eess.IV]. URL: https://arxiv.org/abs/2401.04722.

[16] Manzari, Omid Nejati et al. "MedViT: A robust vision transformer for generalized medical image classification". In: *Computers in Biology and Medicine* 157 (May 2023), p. 106791. ISSN: 0010-4825. DOI: 10.1016/j.compbiomed.2023.106791. URL: http://dx.doi.org/10.1016/j.compbiomed.2023.106791.

[17] Mehta, Sachin and Rastegari, Mohammad. *MobileViT: Light-weight, General-purpose, and Mobile-friendly Vision Transformer*. 2022. arXiv: 2110.02178 [cs.CV]. URL: https://arxiv.org/abs/2110.02178.

[18] Nejati Manzari, Omid et al. "Medical image classification with KAN-integrated transformers and dilated neighborhood attention". In: *Applied Soft Computing* 186 (Jan. 2026), p. 114045. ISSN: 1568-4946. DOI: 10.1016/j.asoc.2025.114045. URL: http://dx.doi.org/10.1016/j.asoc.2025.114045.

[19] Sandler, Mark et al. *MobileNetV2: Inverted Residuals and Linear Bottlenecks*. 2019. arXiv: 1801.04381 [cs.CV]. URL: https://arxiv.org/abs/1801.04381.

[20] Srinivas, Aravind et al. *Bottleneck Transformers for Visual Recognition*. 2021. arXiv: 2101.11605 [cs.CV]. URL: https://arxiv.org/abs/2101.11605.

[21] Waibel, Alexander et al. "Phoneme recognition using time-delay neural networks". In: *Backpropagation*. Psychology Press, 2013, pp. 35–61.

[22] Wu, Haiping et al. *CvT: Introducing Convolutions to Vision Transformers*. 2021. arXiv: 2103.15808 [cs.CV]. URL: https://arxiv.org/abs/2103.15808.

[23] Yang, Jiancheng et al. "MedMNIST v2 - A large-scale lightweight benchmark for 2D and 3D biomedical image classification". In: *Scientific Data* 10.1 (Jan. 2023). ISSN: 2052-4463. DOI: 10.1038/s41597-022-01721-8. URL: http://dx.doi.org/10.1038/s41597-022-01721-8.

[24] Yue, Yubiao and Li, Zhenzhang. "MedMamba: Vision Mamba for Medical Image Classification". In: (2024). arXiv: 2403.03849 [eess.IV]. URL: https://arxiv.org/abs/2403.03849.

[25] Zheng, Ningxin et al. *PIT: Optimization of Dynamic Sparse Deep Learning Models via Permutation Invariant Transformation*. 2023. arXiv: 2301.10936 [cs.LG]. URL: https://arxiv.org/abs/2301.10936.

[26] Zhu, Lianghui et al. *Vision Mamba: Efficient Visual Representation Learning with Bidirectional State Space Model*. 2024. arXiv: 2401.09417 [cs.CV]. URL: https://arxiv.org/abs/2401.09417.