Differential Amplifiers

Pros and cons

- Immune to environmental noise
- doubles maximum achievable voltage swing
- Main cost of diff amp is power dissipation

Differential Signal

- two signals which are equal in magnitude, but opposite in phase
- Total signal pair is denoted Vin_{cm}
  - Taking differential of diff signal results in $2 \cdot V_{\text{in}}$
  - Common mode of diff signal is diff bias voltage

Common Mode

- DC voltage of differential signal
- defined as $\frac{V_1+V_2}{2}$

Diff Amp Operation

- $V_{be1} = V_{be2}$
- $I_{c1} = I_{c2} = \frac{I_{\text{EE}}}{2}$
- thus $V_x = V_y = V_{\text{dd}} - \frac{I_{\text{EE}}}{2} \cdot R_c$ at DC bias
- Transistor bias is independent of CM bias

Differential Pair

- Two CE amps share a current source
  - CS amps in MOS case
- Bias of amp is independent of V_{CM}, e.g. base voltage DC bias
  - $V_x = V_y = V_{\text{CC}} - R_c \frac{I_{\text{EE}}}{2}$
  - This is due to the current source current being split between both branches
- Given differential input current waveforms are also inverses

Virtual Ground

- **V_p, e.g. voltage across current source, is AC ground**
  - Doesn't necessarily mean 0V DC, just that voltage at this point is constant e.g. AC ground
- This effect is contingent upon the input signal being a perfect differential signal

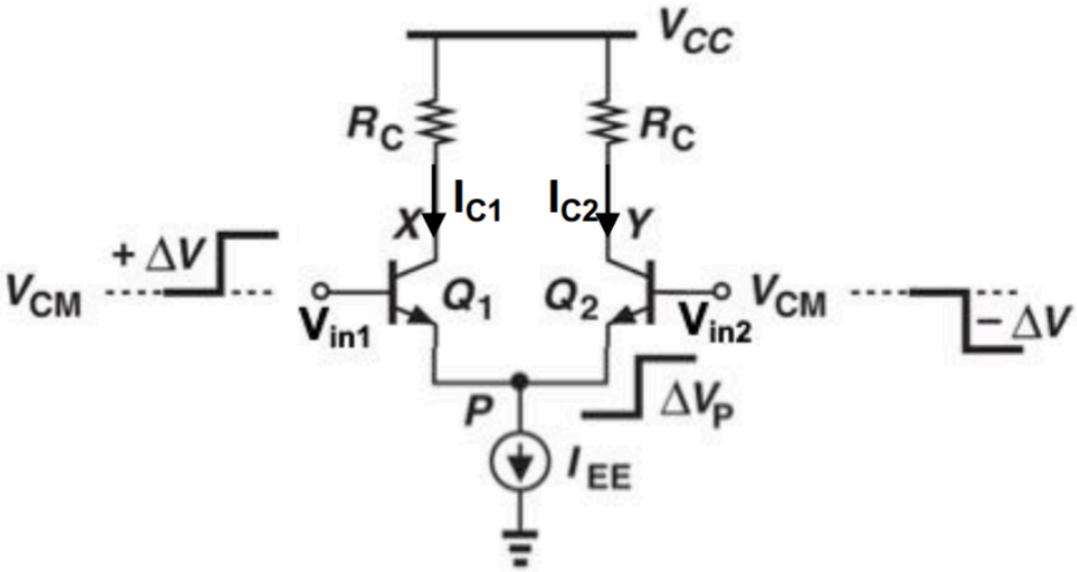

-$\Delta V_x = -(g_m \Delta V) R_c$

-$\Delta V_y = (g_m \Delta V) R_c$

Voltage Gain

$$A_v = \frac{\Delta V_X - \Delta V_Y}{\Delta V_{in1} - \Delta V_{in1}} = \frac{-2 g_m \Delta V R_C}{2 \Delta V} = -g_m R_C$$

- Voltage gain is not improved over standard CE or CS amp
- Advantage is more for noise robustness
- g_m should be matched for both transistors due to current source being evenly split between both branches

Small Signal Analysis

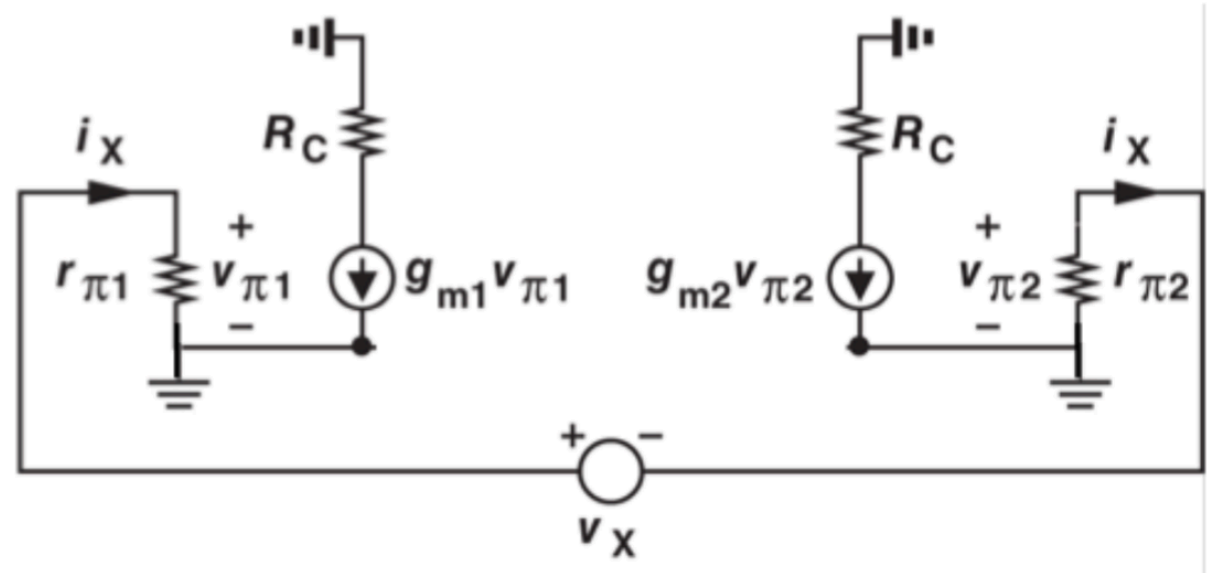

- Note that V_p is AC ground
- Allows us to deal with each branch independently - isolated in small signal