Frequency Response

High Frequency Rolloff

- As frequency increases, the gain of an amp generally decreases

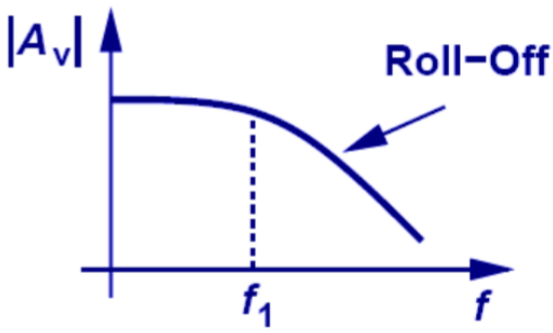

–3 dB Bandwidth

- At corner frequency $|H(j\omega_c)| = \frac{A_0}{\sqrt{2}}$
- Example: $|A_v| = \frac{g_m R_D}{\sqrt{R_D^2 C_L^2 \omega^2 + 1}} = \frac{g_m R_D}{\sqrt{2}}$

- Power becomes half at corner frequency

Bode Plot

- As ω passes each pole frequnecy (denominator, slope decreases by 20 dB/dec)
- As ω passes each zero frequnecy (numerator, slope increases by 20 dB/dec)
- Form to identify poles and zeros:

$$10 \frac{1 + s/10^3}{(1 + s/10^2)(1 + s/10^4)(1 + s/10^5)}$$

Intuitive Pole Identification

- If a capacitor terminal is ground, it creates a pole

- if capacitor acts as feedback in amp, then

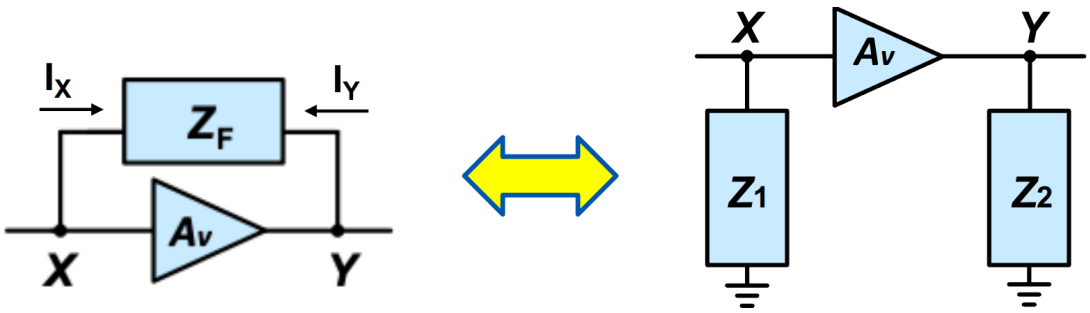

where $Z_1 = \frac{Z_f}{1 - A_v}$ and where $Z_2 = \frac{Z_f}{1 - A_v^{-1}}$

- Simplifying
  $Z_1 = (1 - A_v) C_f \cdot s$
  $Z_2 \approx C_f$ for large $|A_v|$.

- Want small caps to increase bandwidth

Miller Effect

- if gain is A_o, input capacitance for the below config increases by $1 + A_0$

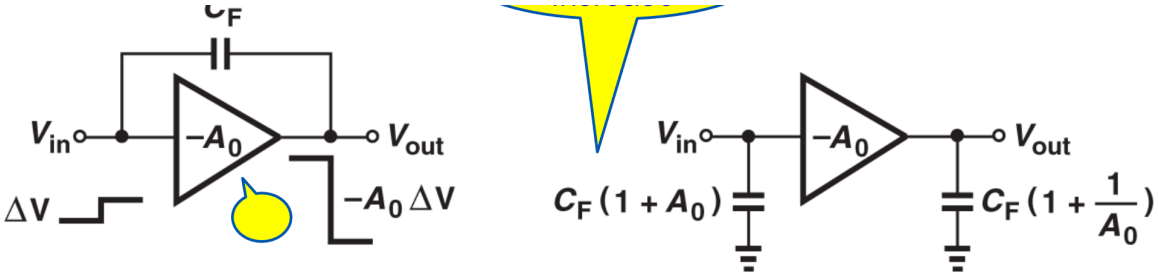

- For example

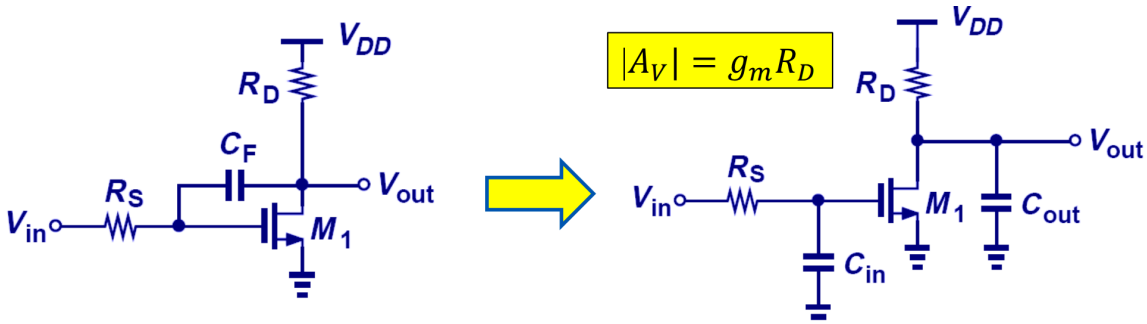

where

$$C_{in} = (1 + A_0)C_F$$
$$= (1 + g_m R_D)C_F$$

$$C_{out} = \left(1 + \frac{1}{g_m R_D}\right)C_F$$

High Frequency Models

BJT

- parasitic capacitance between base and collector is denoted C_μ
- capacitance between base and emmiter is C_π, is equal to $C_b + C_{\text{je}}$

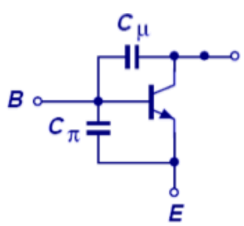

- In small signal,

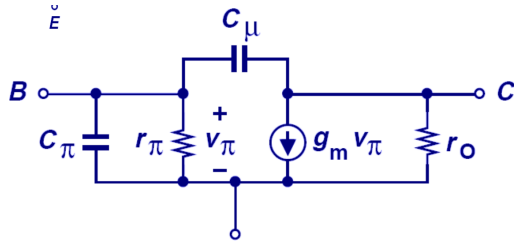

- In the IC BJT model, there is another parasitic capacitance from collector to ground denoted C_{cs}

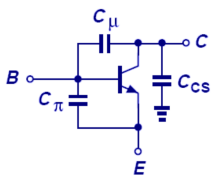

- in small signal,

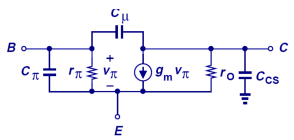

MOSFET

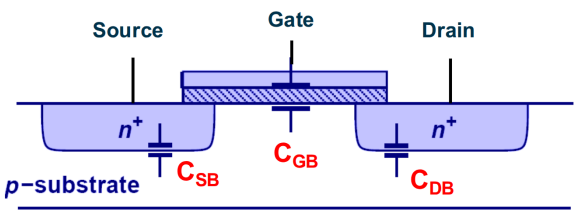

- between gate and drain:

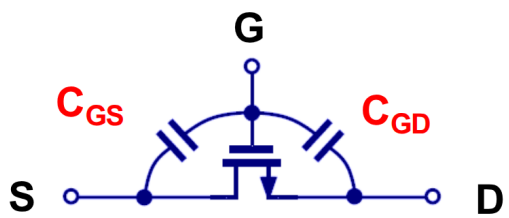

- Circuit model for MOSFET:

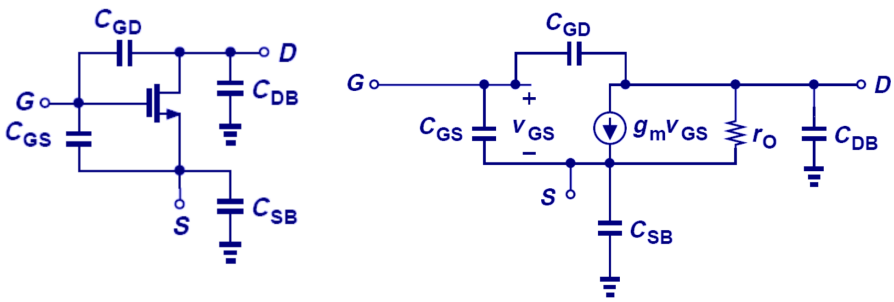

- Capacitance depends on operating conditions of MOSFET
  - E.g. C_{gs} is largest in saturation region

CE and CS Amps (Frequency Dependent Model)

CE Amp

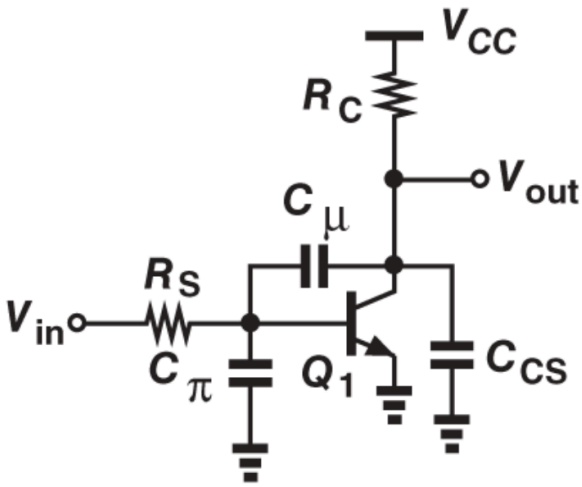

- Feedback cap C_μ makes finding A_v complicated
  - Use Miller's theorem, seperate capacitance into C_{in} and C_{out} e.g.

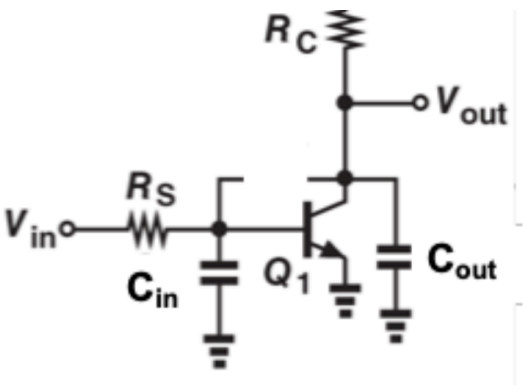

- This makes the small signal model

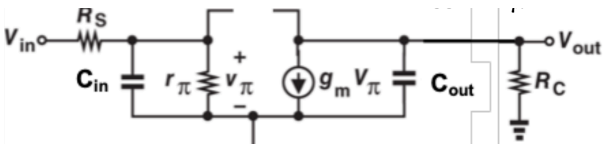

where

$$C_{in} = C_\pi + (1 + g_m R_C) C_\mu \qquad C_{out} = C_{CS} + \left(1 + \frac{1}{g_m R_C}\right) C_\mu \approx C_{CS} + C_\mu$$

- 2 poles
- Remember that gain · bandwidth = k where k is some constant
  - As gain increases, bandwidth decreases, and vice versa

CS Amp

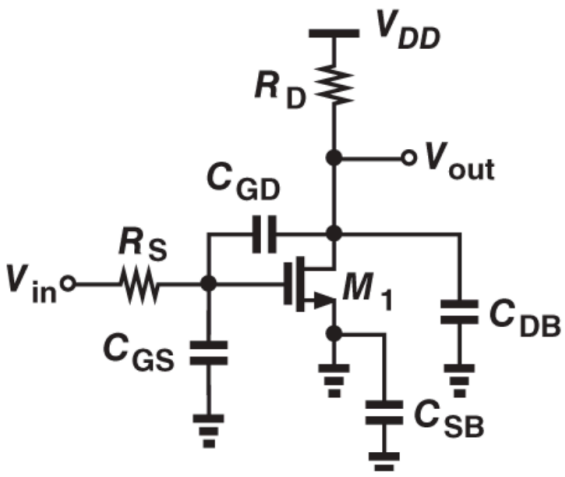

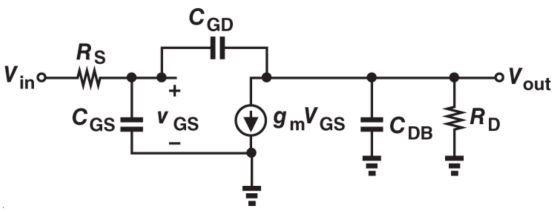

- Same process, use Miller's theorem to remove feedback cap, replace with equivalent model
  - Now, the small signal model is

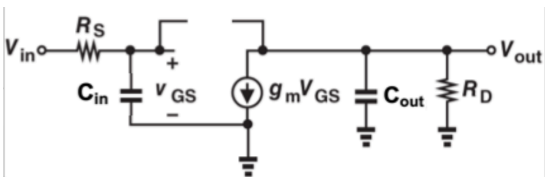

  which is easier to analyze
- 2 poles

Bandwidth

- Miller effect increases C_{in} by a factor relating to gain
  - As gain increases, C_{in} increases, and bandwidth decreases, larger C_{in} results in lower frequency pole
  - The input pole caused by C_{in} is dominant over pole caused by C_{out}

- Miller's theorem is an approximation

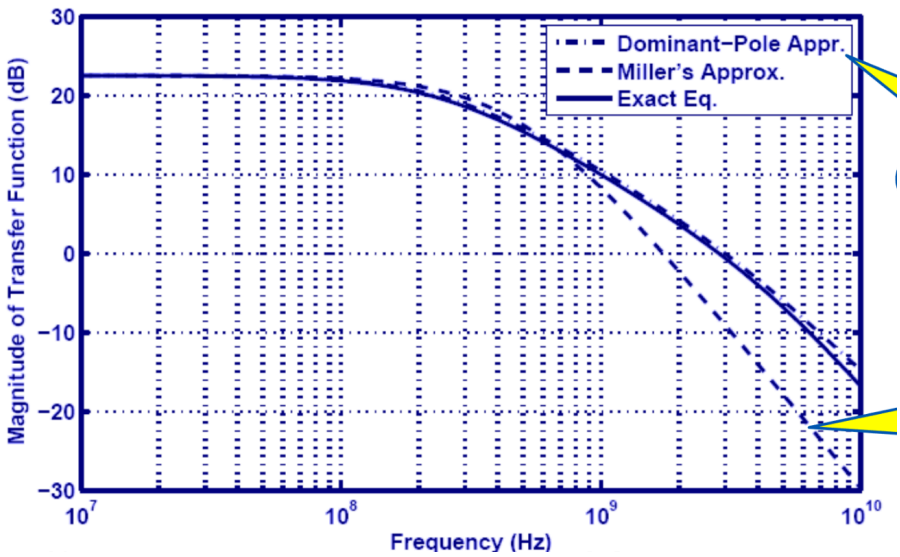

- Approximation diverges from reality as frequency increases

Input Impedance of CE Amp

$$Z_{in} \approx \frac{1}{\left[C_\pi + \left(1 + g_m R_C\right) C_\mu\right] s} \parallel r_\pi$$

,

- As frequency increases, Z_{in} decreases

Input Impedance of CS Amp

$$Z_{in} \approx \frac{1}{\left[C_{GS} + \left(1 + g_m R_D\right) C_{GD}\right] s}$$

- As frequency increases, Z_{in} decreases