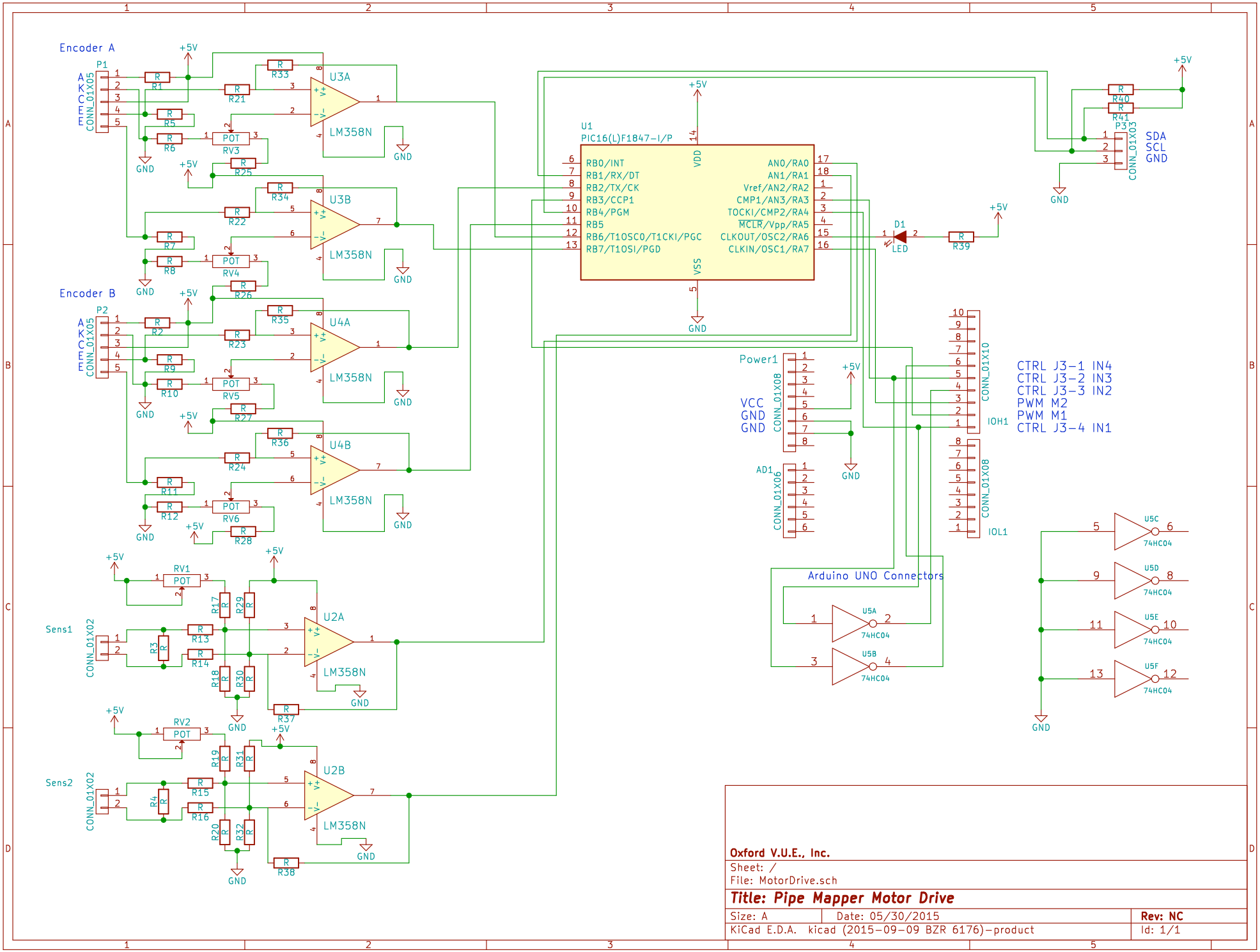

Oxford V.U.E., Inc.

Sheet: /

File: MotorDrive.sch

Title: Pipe Mapper Motor Drive

Size: A	Date: 05/30/2015	**Rev: NC**
KiCad E.D.A. kicad (2015-09-09 BZR 6176)-product		Id: 1/1