EE3-18
EE9-AO12

IMPERIAL COLLEGE LONDON

DEPARTMENT OF ELECTRICAL AND ELECTRONIC ENGINEERING
EXAMINATIONS 2014

MSc and EEE PART III/IV: MEng, Beng.and ACGI

MICROWAVE TECHNOLOGY

Corrected Copy

Thursday, 16 January 2:30 pm

Time allowed: 3:00 hours

There are SIX questions on this paper.

Answer FOUR questions.

All questions carry equal marks

Any special instructions for invigilators and information for candidates are on page 1.

Examiners responsible First Marker(s) : S. Lucyszyn
Second Marker(s) : O. Sydoruk

© Imperial College London

Special instructions for invigilators

This is a closed book examination.

Special instructions for students

Permeability of free space, $\mu_o = 4\pi \times 10^{-7}\ [H/m]$

Permittivity of free space, $\varepsilon_o \approx 8.854\,[pF/m]$

© Imperial College London

The Questions

1. Consider room temperature copper, having an intrinsic bulk DC conductivity of 5.8×10^7 S/m.

   a) With the classical skin-effect model, the electromagnetic fields within the metal decay exponentially from their surface values.

      i) Illustrate with a drawing the transmission circuit model that would account for this type of exponential decay in the fields as they propagate into the metal. What is the normal name given to the internal impedance of a metal (i.e. equivalent input impedance into this circuit)?

      [3]

      ii) Illustrate with a drawing the equivalent lumped-element circuit model for the internal impedance of the metal.

      [2]

   b) Given that intrinsic impedance of a normal material is the square root of the ratio of permeability over permittivity as the starting point:

      i) Give an expression for the effective relative permittivity (also known as the dielectric function) of the metal. Define all variables.

      [2]

      ii) From 1(b)(i), derive the expression for the intrinsic impedance of the metal. Clearly define all variables and state any approximations.

      [2]

      iii) From 1(b)(ii), derive the expression for classical skin depth from the propagation constant and calculate its value at 2.45 GHz. Clearly define all variables. How does the order of magnitude of this calculated value compare with the usual thickness of copper-cladding in printed circuit boards and with its general ability to provide screening at this frequency?

      [4]

   c) For the two lumped elements drawn in 1(a)(ii):

      i) Calculate their values at 2.45 GHz and show their approximate dependency on skin depth and also frequency, using the expression derived in 1(b)(iii).

      [5]

      ii) State their effects on the frequency resonance curve of a high-Q resonator that is implemented using copper transmission lines.

      [2]

© Imperial College London

2. Human body tissue can be modelled as a microwave dielectric material. At 2.45 GHz, the following material properties have been reported:

Fat has $\varepsilon_r' = 12$ and $\sigma = 0.82\ S/m$
Muscle has $\varepsilon_r' = 49.6$ and $\sigma = 2.56\ S/m$

The above variables have their usual meaning.

a) For both body fat and muscle, calculate:

i) Intrinsic impedance. [3]

ii) Propagation constant. [2]

iii) Skin depth. [2]

iv) Power attenuation in dB per unit wavelength. [3]

v) Power flux density given an RMS electric field intensity of 4 V/cm. [2]

b) From the results in 2(a), calculate the voltage-wave reflection coefficient and power reflectance at the interface between the fat and muscle. [4]

c) Based on the results calculated in 2(a) and 2(b), compare and contrast the different materials and suggest how it may be possible to detect the presence of fat using microwave techniques. [4]

© Imperial College London

3.

a) From first principles, derive the well-known expression for the normalised input impedance to a lossless transmission line of arbitrary electrical length θ that is terminated with arbitrary load impedance.

[8]

b) From the expression derived in 3(a), for a short-circuit terminating load impedance, sketch the normalized input impedance against physical length l as it increases through a complete wavelength. If the lengths of the transmission line are $\lambda g/10$ and $3\lambda g/10$, calculate the effective lumped-element component values at 2.45 GHz, for 50 Ω transmission lines. If these two stubs were then connected at the same point along a transmission line, in a stunt arrangement, what would be the resulting circuit?

[6]

c)

i) State one advantage of an open-circuit stub, when compared to a short-circuit stub. Also, give a common practical application for the open-circuit stub and state any assumptions about its electrical length.

[3]

ii) State one advantage of a short circuit stub, when compared to an open circuit stub. Also, give a common practical application for the short circuit stub and state any assumptions about its electrical length.

[3]

© Imperial College London

4. The photograph in Figure 4.1 is of a MMIC.

a) Draw the basic equivalent circuit model for the MMIC shown in Figure 4.1, and mark the RF and DC bias ports with the corresponding probe pad numbers shown. Describe the type of amplifier circuit. If you are uncertain about a component then state any assumptions used.

[10]

b) Briefly describe the different range of component technologies used for the transistors, inductors and capacitors, and also state the advantages and disadvantages of these technologies. State what compromises have to be made with the design of MMICs, when compared to HMICs.

[5]

c) Briefly comment as to why the complexity of the full (realistic) equivalent circuit model is much more than the circuit drawn in 4(a) and explain why circuit modelling alone is not sufficient if a significant reduction in the chip area is required.

[5]

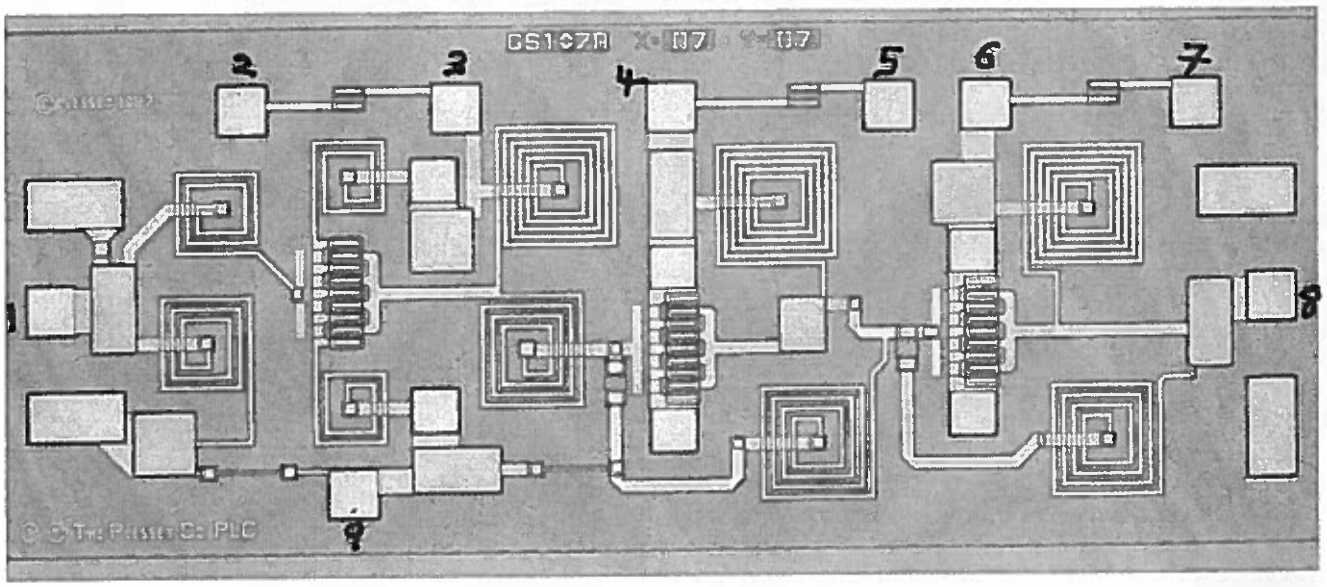

Figure 4.1 Photograph of a 3.5 x 1.5 mm^2 LNA

5. An ideal air-filled rectangular waveguide has a guided-wavelength given by the following expression:

$$\lambda_g = \frac{\lambda_o}{\sqrt{1-\left(\frac{f_c}{f_o}\right)^2}} \qquad (5.1)$$

All variables have their usual meaning.

In addition, for the TE_{101} mode, the unloaded Q-factor for an air-filled rectangular waveguide resonant cavity is given by the following expression:

$$Q_u\big|_{TE101} \cong \frac{Volume}{Area \times (\delta_o / 2)} \qquad (5.2)$$

All variables have their usual meaning.

a) For a half-height waveguide (i.e. its height dimension b is half that of the width dimension a:

i) Using (5.1), derive an expression for the length l of the cavity in terms of a and the frequency dependence term. [4]

ii) Using (i), derive an expression for the internal volume of the cavity. [2]

iii) Using (i), derive an expression for the internal area of the cavity. [3]

iv) Using (5.2) and assuming that $f_o / f_c = \sqrt{2}$, derive an expression for the unloaded Q-factor in terms of a and classical skin depth. [4]

v) Using (iv), calculate the unloaded Q-factor for a 15.5 GHz resonant cavity made with copper walls having a DC bulk conductivity of 5.8 x 10^7 S/m. [4]

b) For a cubic cavity (i.e. all internal dimensions are equal) derive an expression for the unloaded Q-factor in terms of a and classical skin depth and show that this has a 33.333% higher unloaded Q-factor when compared to the half-height case. [3]

© Imperial College London

6.

a) State the electric and magnetic field boundary conditions for a perfect electrical conductor (PEC) wall. A microwave oven operates at 2.45 GHz. If the internal cavity dimensions of the oven are 30 cm x 30 cm x 20 cm, illustrate the electric field energy distribution inside an empty oven having PEC walls. What happens to this distribution when food is placed inside the oven and what is the role of the turntable?

[5]

b) Calculate the loss tangent for a block of solid fat having a dielectric constant $\varepsilon_r' = 12$ and conductivity $\sigma = 0.82\, S/m$. With a peak magnetic field intensity of 265 mA/m, estimate the average power dissipated per unit volume within the fat.

[5]

c) Using the power density calculated in 6(b), if the block of fat has a mass of 250 g, dimensions of 4 cm x 6 cm x 9 cm, specific heat capacity of 1.67 kJ/kg °C and melting temperature of 184 °C, estimate the approximate number of days needed to melt this fat when taken from a refrigerator that is cooled down to 3 °C. For this simple calculation, what assumptions have to be made with respect to the spatial distribution of power density within the block of fat and also the solid-liquid phase states of the fat during heating?

[7]

d) What energy source technology is employed in traditional microwave ovens? What are the three main advantages for microwave ovens that employ a solid-state solution to providing the energy source? What methods can be employed to create time-variant spatial fields within the cavity for both the traditional and solid-state solutions?

[3]

© Imperial College London