Remarks on student answers (blue)

1.

a) The Fermi Level, E_F is the energy at which the **probably** to find an **electron** is ½. [4]

Marks were lost by calling this EF a level, there is no level in the bandgap.

b) [6]

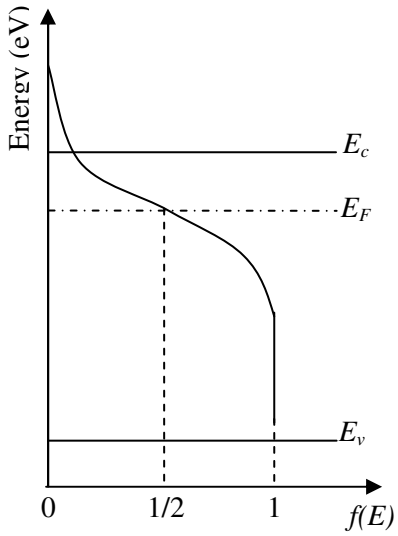

Marks were lost mainly because students are used to drawing f(E) as a function of E rather than the other way round.

c) Bias [2] marks, schottky [3], rest [1] [6]

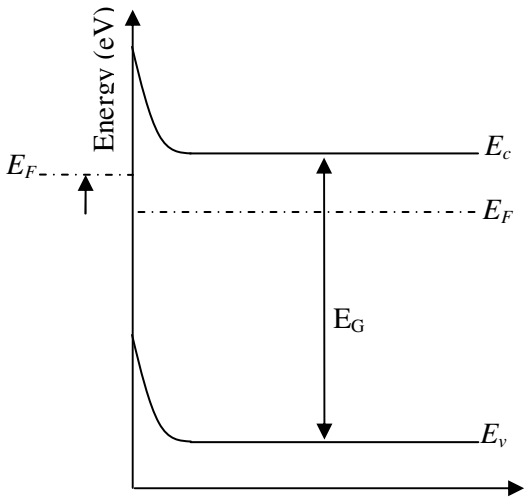

Overall fine.

d) Decrease the workfunction of the metal or change the doping type. [4]

Overall fine.

e) Depletion width in p region larger than in n. [10]

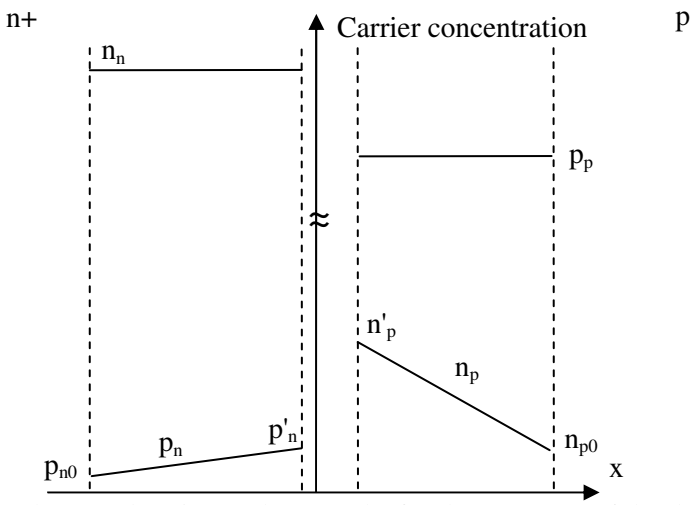

[4] marks for each neutral region and [2] marks for the accuracy of the depletion region.

Key information: linear minority carrier variation. Concentrations at contacts must be the equilibrium concentrations. Majority carrier concentrations must be must higher than minority carrier concentrations and n'p must be higher than p'n. For the depletion width: it should extend most in the lowest doped region and the minority carrier sketches should start from the edges of the depletion width.

Marks were lost primarily by not adding the majority carrier concentration. And/or by adding large concentration variations of majority carriers with respect to minority carriers (note that the assumption has always been to ignore the variation of majority carriers, on the same scale as the minority carriers this variation is negligible). Not drawing all on the same graph and forgetting to indicate differences in orders of magnitude.

f) [5]

$$I_{DS} = \frac{\mu C_{ox} W}{L}\left((V_{GS} - V_{th}) V_{DS} - \frac{V_{DS}^2}{2} \right)$$

In saturation this becomes:

$$V_{DS} = (V_{GS} - V_{th})$$

$$I_{DS} = \frac{\mu C_{ox} W (V_{GS} - V_{th})^2}{2L}$$

Thus graph must be quadratic [2]. nMOS enhancement has positive threshold voltage.

Marks were lost by forgetting Vth or by forgetting that in saturation it is a quadratic equation (see formulae sheet).

No marks were allocated to answers that draw the output characteristic (IDS versus VDS)

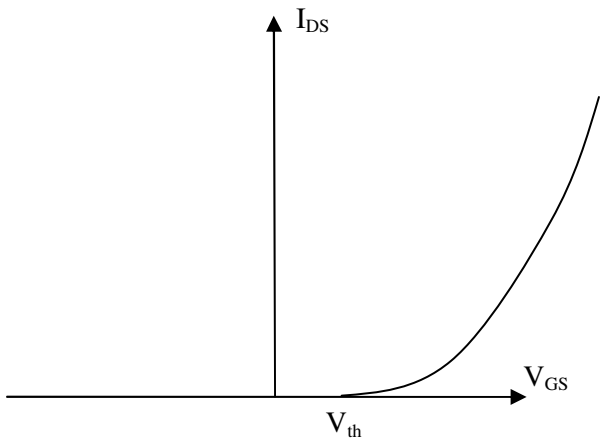

g) npn BJT: output current is due to electrons. $I_E = I_{EBn} + I_{EBp}$. $I_B = I_{EBp}$. $I_C = I_{EBn}$. [5]

Marks were lost primarily by not realizing this is an npn and not a pnp BJT.

2.

a) From the formulae list:

$$n = N_c e^{-\frac{(E_c - E_F)}{kT}}$$

Definition of E_i gives rewrites (1) for an intrinsic material $n = n_i$ and $E_F = E_i$ to:

$$n_i = N_c e^{-\frac{(E_c - E_i)}{kT}} .$$

Combining (1) and (2) gives:

$$n = N_c e^{-\frac{(E_c - E_F)}{kT}} \quad \& \; n_i = N_c e^{-\frac{(E_c - E_i)}{kT}}$$

$$\frac{n}{n_i} = \frac{N_c e^{-\frac{(E_c - E_F)}{kT}}}{N_c e^{-\frac{(E_c - E_i)}{kT}}} = e^{-\frac{(E_c - E_F) + (E_c - E_i)}{kT}} = e^{-\frac{(E_i - E_F)}{kT}}$$ [5]

$$n = n_i e^{-\frac{(E_i - E_F)}{kT}}$$

Note that this is an exercise that is very similar to what we have done in the study group questions. Many people made solving this question unnecessarily complicated.
Many students made the approximation that Ei is lying halfway. This was partially acceptable (note that this is only true is Nv = Nc, as is approximately correct for Si) and only fully accepted when this approximation was explicitly mentioned in the solution

b) $p_p = N_A = 10^{16}$ cm^{-3}

Thus the electron concentration is: $n_p = n_i^2/N_A = (1.45 \times 10^{10}\ \text{cm}^{-3})^2/10^{16}\ \text{cm}^{-3}$ $= 21\ 10^3$ cm^{-3}. [5]

$$n_p = n_i e^{-\frac{(E_i - E_F)}{kT}}$$

$$\frac{n_p}{n_i} = e^{-\frac{(E_i - E_F)}{kT}}$$

$$\ln\left(\frac{n_p}{n_i}\right) = -\frac{(E_i - E_F)}{kT}$$

$$E_F - E_i = kT \ln\left(\frac{n_p}{n_i}\right) = kT \ln\left(\frac{n_i}{N_A}\right) = 0.026eV \ln\left(\frac{1.45 \times 10^{10}}{10^{16}}\right) = -0.35\,eV$$

Correct use of units is important. Student gained marks here even when a) was incorrect by taking a different approach.

c) . [5]

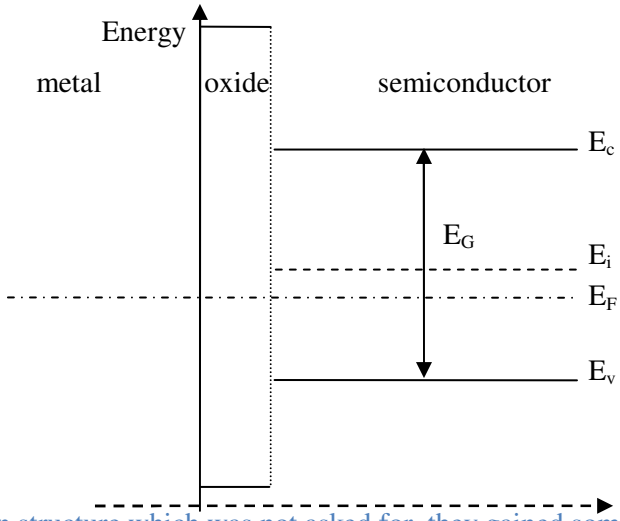

Some student drew the npn structure which was not asked for, they gained some marks if done correctly. Some students were confused as to whether this was just a drawing from n+ contact into bulk. This also gained some marks if it was written down that this was what is done. This is a very simple question though not everyone realised this.

d) Note that at the given conditions the channel is pinched off at the drain side and thus we find the onset of inversion condition there, see red arrows. [5]

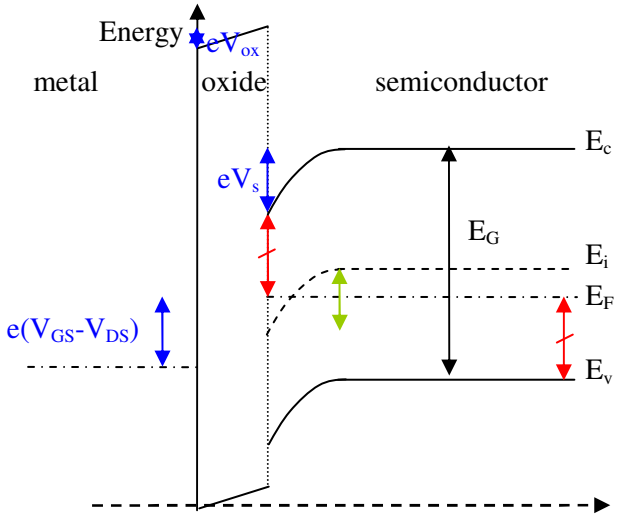

Note that Ei must remain the intrinsic level, thus needs to follow Ec(Ev).
Red arrows indicate that channel is pinched off
-1 mark for not bending Ei
-2 marks for not getting pinch off correct

e)

i) See blue (on-line) arrows in previous : [6]

-1 mark for VGS instead of VGS-VDS
2 marks for each voltage correctly drawn, accuracy of drawing is important -> -1 mark for not being accurate.

ii) $V_s = 2 \times (E_i - E_F)$. We conclude that for the onset of inversion the voltage drop across the semiconductor is given by $V_s = 2 \times (E_i - E_F)$. [4]

some answered correctly because their drawings were correct, some knew it from the text book I think and some answered wrongly but gave an acceptable explanation for their answer. Important is that answer is consistent with the drawing.

3.

a) [5]

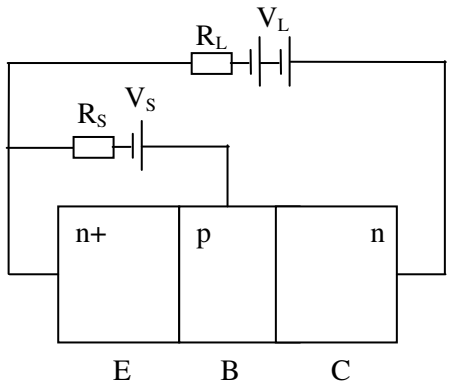

The presence of the resistors is not important for EE1.
Other biasing circuits -2 if bias orientation is correct. Many people drew the correct common base configuration. Common emitter was used sometimes in lectures but is the standard configuration for analogue electronics!

b) [10]

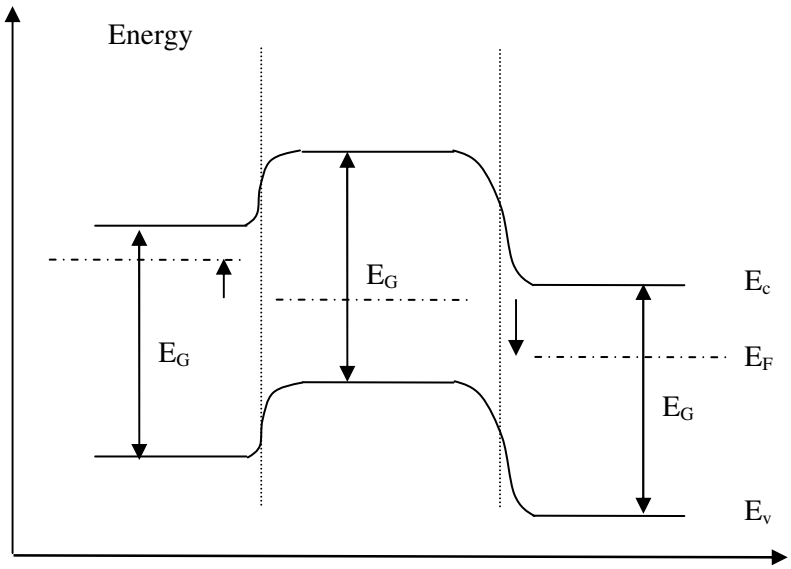

Key information:

The position of the Fermi level in each region must be consistent with the doping type. Fermi level in emitter must be closer to conduction band that that in collector. The lower doping in the base must be reflected by the position of the Fermi level with respect to the valence band in comparison to the position of the Fermi level in the emitter with respect to the conduction band. Fermi level should not be constant as voltages are applied. EF in emitter higher than EF in base (EB forward bias thus the potential barrier smaller than that of BC). EF in base higher than EF in collector because reverse bias (potential barrier larger than that of EB). Ec and Ev should be horizontal outside the depletion regions (must not be drawn as not requested). If drawn the relative magnitude difference between EB and BC must be apparent.

[3] marks for each region + [1] mark for accurateness.

The worst that can be done in this exercise is to draw a slope in Ec and Ev in the base. A slope would mean an electric field and the basic approximation that is taken in BJTs and diodes is that electric fields in the neutral regions are negligible. This is also important for the next question.

c) No, there is no potential drop across the base, the voltage is dropped mainly across the depletion regions surrounding the junctions. The minority carriers in the base move due to diffusion because the concentration of minority carriers at the emitter junction is larger than at the collector junction. [5]

d)

i) I_C is due to the electrons injected into the base by the emitter that then diffuse through the base. Thus it is the electron current of the emitter-base diode. Looking at the expression of the electron diode diffusion current density in the formulae list we find:

$$J_n = \frac{eD_n n_{p_0}}{L_n}\left(e^{\frac{eV}{kT}} - 1\right)$$

However this electron diffusion current is determined by the base width and not the diffusion length. The voltage is the emitter-base voltage. The diffusion constant is given via the Einstein equation in the formulae list. Thus the expression of the electron diffusion current through the base is given by:

$$I_C = I_n = \frac{eD_n n_{p_0}}{W_B}\left(e^{\frac{eV_{EB}}{kT}} - 1\right)A = \frac{ekT\mu_n n_{p_0}}{eW_B}\left(e^{\frac{eV_{EB}}{kT}} - 1\right)A = \frac{ekT\mu_n n_i^2}{eW_B N_{A_B}}\left(e^{\frac{eV_{EB}}{kT}} - 1\right)A$$

$$I_C = \frac{0.026V \times 1.6\,10^{-19}C \times 200cm^2/Vs \times \left(1.45\,10^{10}\,cm^{-3}\right)^2}{0.5\times10^{-4}\,cm \times 10^{16}\,cm^{-3}}\left(e^{\frac{0.26}{0.026}} - 1\right)\times10^{-4}\,cm^2$$

$$I_C = 7.71\times10^{-10}\,A$$

[6]

Standard problems here are associated to mixing m with cm and mm and µm. Units should be made consistent and should be given. Another problem is forgetting to write down the equation for the current, scribbling some values all over the place and then getting the wrong answer. Tracing the working out in that case is nearly impossible.
This is an easy question as long as you realise that only In needs to be calculated and that this is done in the base.

ii) increase the doping density and increase the emitter width. [4]

The standard problem is that students do not read the question, so there were lots of suggestions on how to change the base, but that was not the question and thus got no marks.

Note that there is no reason to work β out. One only has to use the physics on β=IC/IB thus IC large is done by high emitter doping (large electron injection into base) and IB small is done by large emitter length (small gradient).