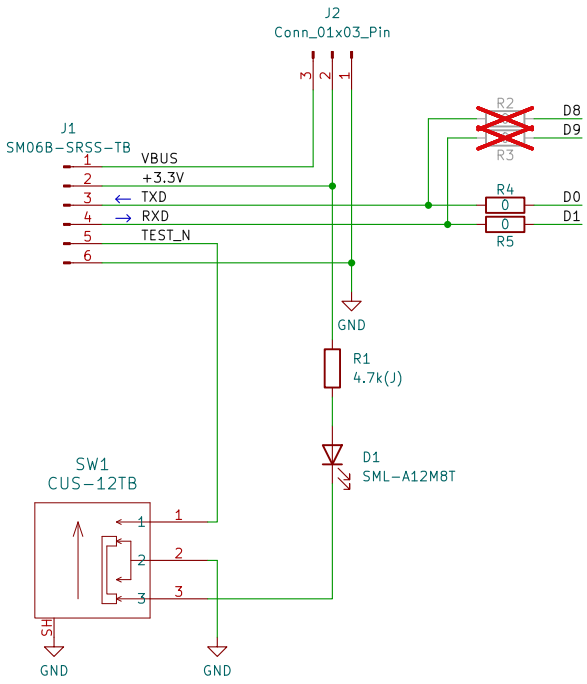

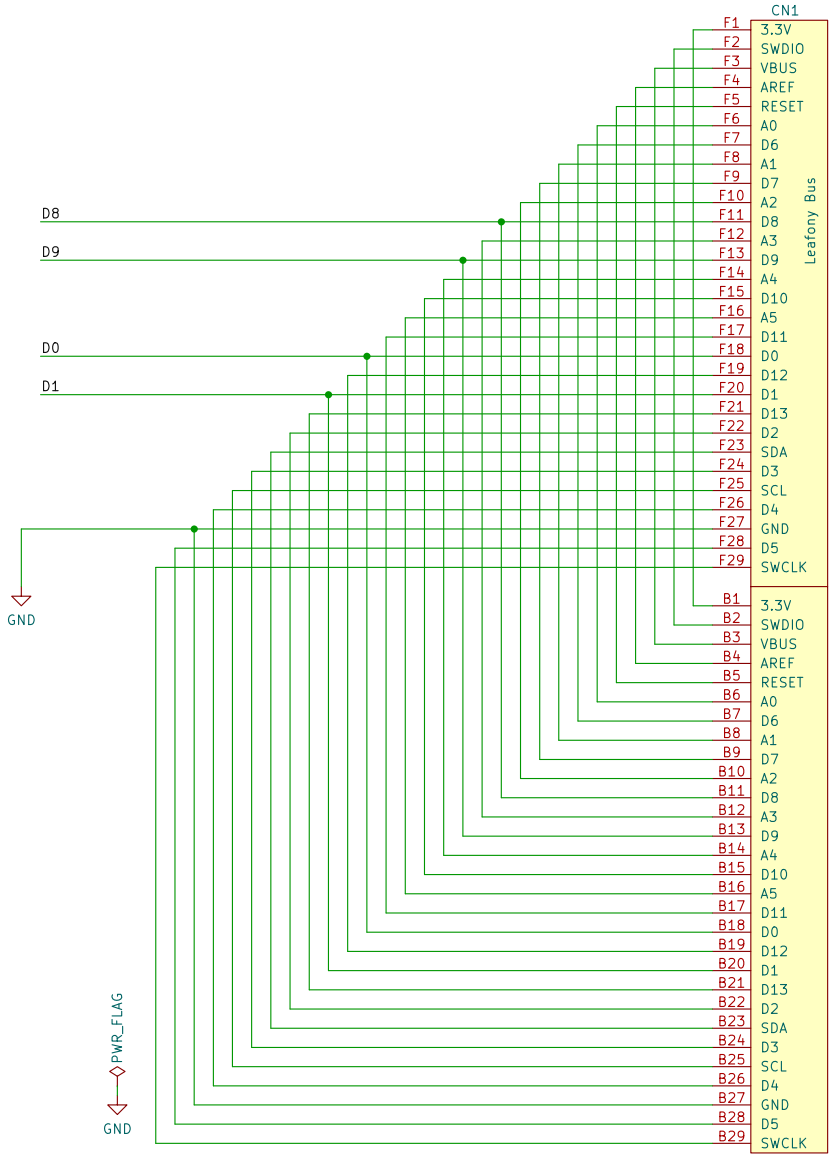

Leafony

Leafony Systems Ins.

Sheet: /
File: leafony-solar-charger-debugger.kicad_sch

Title: Leafony Solar Charger Debugger

Size: A4	Date: 2025-02-09	**Rev: v1.0**
KiCad E.D.A. 9.0.1		Id: 1/1