Systems with Analog Integrated Circuits

Analog Interface Design and Simulation

Coordinating Teacher:

Vladu Gheorghe Eduard
Alessandro Battigelli
Oneț Raul Ciprian

Student:

Leaha Ioana-Cristina
Group 2331-TST en

Contents

1. Project Basis 3
1.1. Requirement 3
1.2. Block diagram 3
1.3. Specifications 3
1.3.1. Stage 1: Instrumentation Amplifier with Passive Current Feedback 3
1.3.2. Stage 2: Band pass filter Tow-Thomas 4
1.3.3. Stage 3: Programmable Gain Amplifier (PGA) 4
1.3.4. Stage 4 : Precision Positive Peak Detector 5
2. Sizing 6
2.1. Stage 1 6
2.2. Stage 2 8
2.3. Stage 3 10
2.4. Stage 4 12
3. Simulation results 12
3.1. Instrumentation amplifier with Passive Current Feedback 12
3.1.1. Operating Point 12
3.1.2. AC 13
3.1.3. Transient 17
3.2. Tow-Thomas Band-Pass Filter 18
3.2.1. Operating Point 18
3.2.2. AC 19
3.2.3. Transient 21
3.3.Programmable Gain Amplifier(PGA) 21
3.3.1. Operating Point 21
3.3.2. AC 22
3.3.3. Transient 24
3.3.4. Precision Positive Peak Detector 27
3.3.5. Operating Point 27
3.3.6. DC 27
3.3.7. Transient 29
4. Digital Interface Integration and Performance summary 31
5. Conclusion 34

1. Project Basis

1.1. Requirement

This project focuses on the development of an analog interface with established operational requirements. The design validation process entails detailed performance measurements and error analysis. The system architecture is organized as a **signal conditioning cascade** divided into **four** distinct stages:

- **Stage 1**: Instrumentation Amplifier with Passive Current Feedback
- **Stage 2**: Active Band-Pass Filter 2AO V-V (Tow_Thomas topology)
- **Stage 3**: Programmable Gain Amplifier (PGA)
- **Stage 4**: Precision Positive Peak Detector

1.2. Block diagram

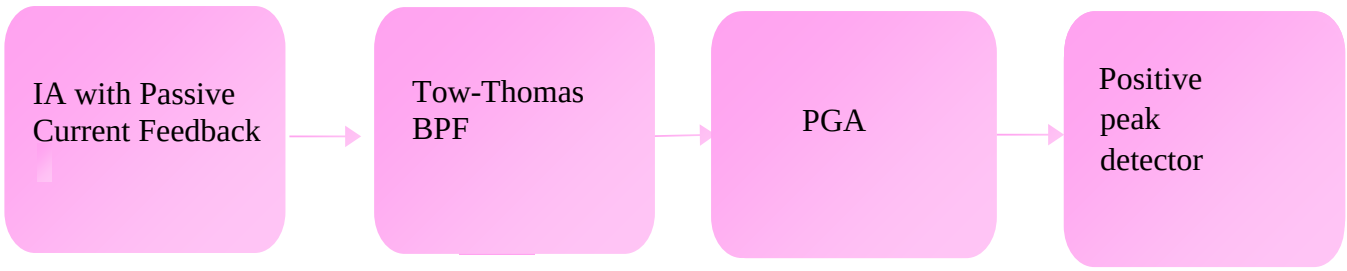

Figure (1): Block diagram

1.3. Specifications

The system architecture is defined by the following four cascaded functional blocks, each of which is described in detail below.

1.3.1. Stage 1: Instrumentation Amplifier with Passive Current Feedback

The first stage is implemented as a hybrid differential amplifier topology driven by a differential voltage source. The circuit utilizes a discrete bipolar input pair (2N3904) combined with an ADA4627 operational amplifier. A resistive feedback network (Rf/Rg) sets a linear gain magnitude of **17 V/V (24.6 dB)**, designed to process differential input signal amplitudes ranging from **52.3 mV to 104 mV**.

The configuration can be seen in Figure (2).

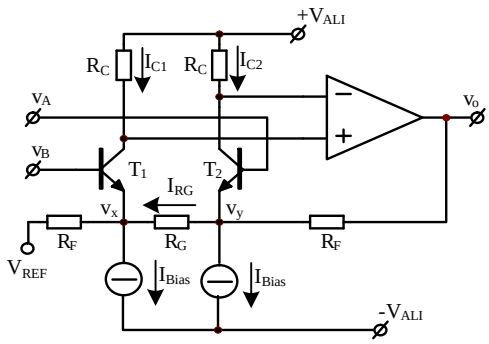

Figure (2): Instrumentation Amplifier with Passive Current Feedback

1.3.2. Stage 2: Band pass filter Tow-Thomas

The second stage is a **Tow-Thomas Band-Pass Filter** designed to isolate the signal at **6 kHz**. It is configured for a gain of **1 V/V** and a Quality Factor (Q) of **1**.

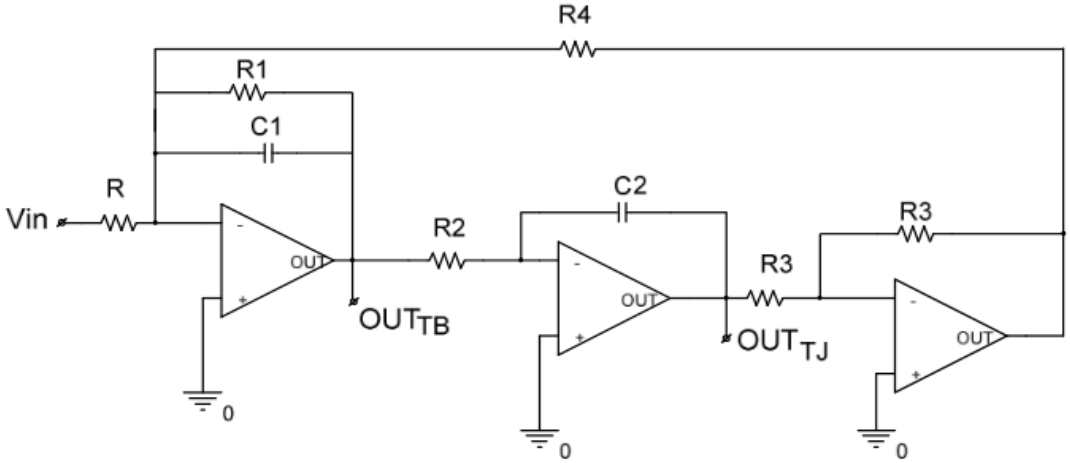

Figure (3): Band pass filter Tow-Thomas

1.3.3. Stage 3: Programmable Gain Amplifier (PGA)

The third stage is a **Programmable Gain Amplifier (PGA)** implemented using a non-inverting topology with a switched-resistor feedback network. It allows for dynamic signal leveling by offering **4 distinct gain steps** ranging from **9 dB to 15 dB**, with a resolution of **2 dB** per step.

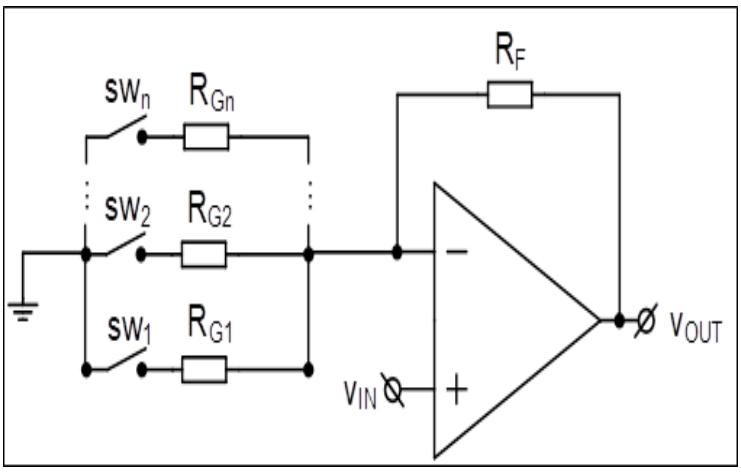

Figure (4): PGA

1.3.4. Stage 4 : Precision Positive Peak Detector

The fourth stage is a **Precision Peak Detector** designed to capture and hold the maximum positive signal amplitude. It operates with **Unity Gain (1 V/V)** and uses a **voltage follower** to prevent signal loss.

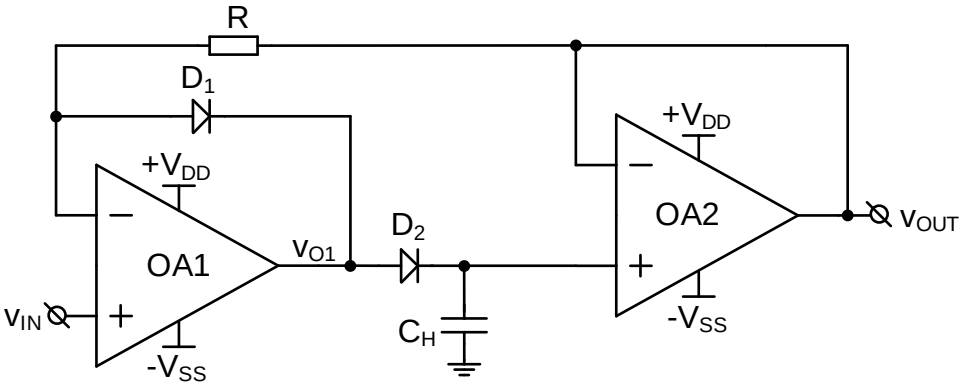

Figure (5): Precision Positive Peak Detector

2. Sizing

.

2.1. Stage 1

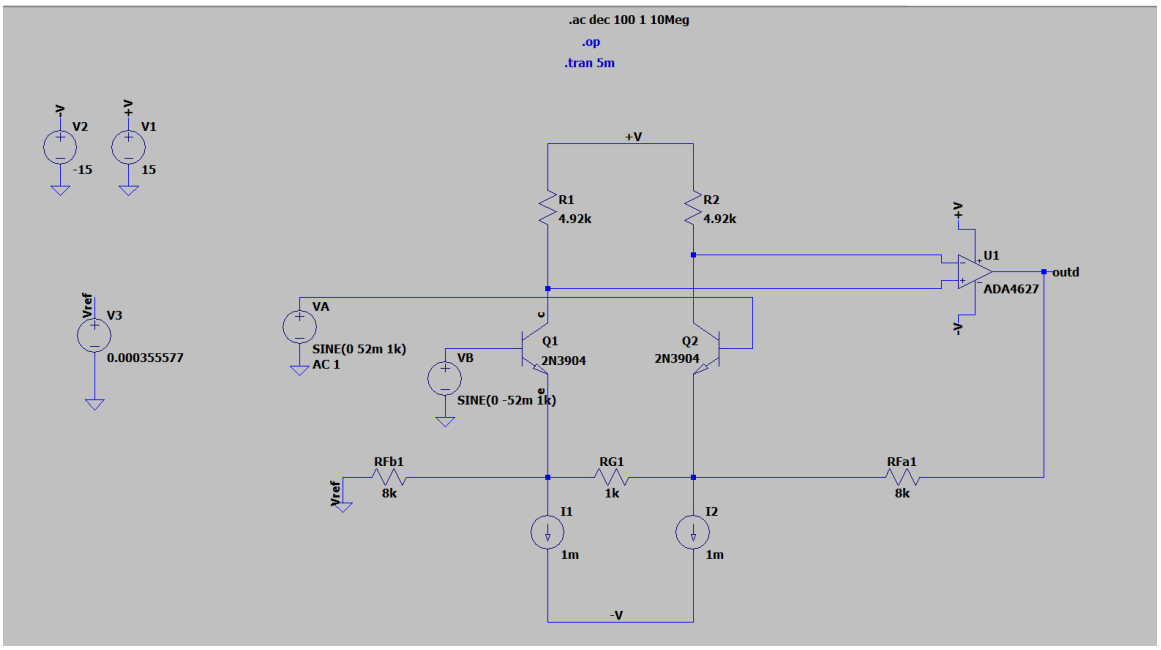

Figure (6): Stage1 : Instrumentation Amplifier with Passive Current Feedback

1. **Gain Sizing:**

The most critical part of the sizing is setting the resistance values to achieve the required amplification.

- **The gain equation is:** $\boldsymbol{Av} = 1 + \frac{2\boldsymbol{Rf}}{\boldsymbol{Rg}}$ **, Av=17 and we obtain the ratio** $\frac{\boldsymbol{Rf}}{\boldsymbol{Rg}} = 8$

  We assume 2 possible values, $\boldsymbol{Rf} = 8\boldsymbol{k\Omega}$

  $\boldsymbol{Rg} = 1\boldsymbol{k\Omega}$

- **Bias current sizing: (I1, I2):**

  The 1mA bias current balances noise reduction with thermal stability. This value prevents self-heating drift and is confirmed by the datasheet as an optimal operating point for the transistor

- **Rc value :** $Vc = 10.0$

  $Ve = -0.65V$

  $Vce = Vc - Ve = 10.08 + 0.65 = 10.73V$

  $15 - Ibias * Rc = Vc$

  $Ibias * Rc = 15 - 10{,}08 = 4.92V$ =>$\boldsymbol{Rc} = 4.92\boldsymbol{k\Omega}$

- **For the values of the differential input sources(VA,VB)**, having a differential voltage, from my specifications, I divided the maximum amplitude **104 mV** by 2 and set the values on both sources equal. on VA with plus (**52mV**) and Vb with minus (**-52mV**).

- For the ADA4627 OpAmp **supplies** I chose **+15V** and **-15V** by checking this characteristic in the datasheet.

- For the value of **Vref**, I equaled **VA** and **VB** to 0 and then I simulated Vout , the value of Vref being this value with minus Vref=0.000355577.

2.2. Stage 2

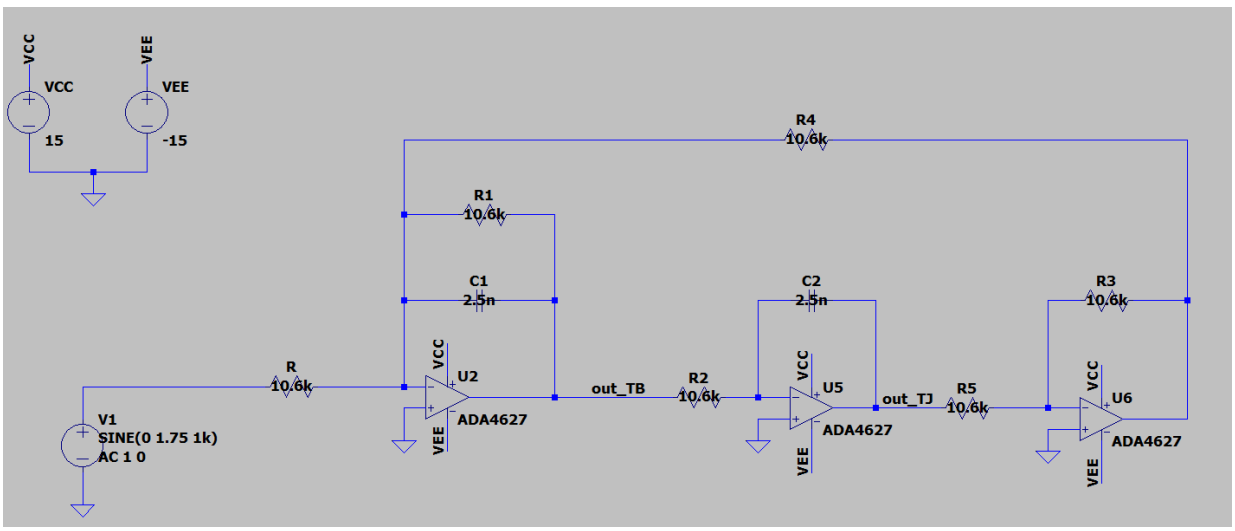

Figure (7): Stage 2 :Band-Pass Filter (Tow-Thomas topology)

The second stage is designed as an active band-pass filter using the Tow-Thomas topology.

$$\boldsymbol{f}0 = \boldsymbol{BW} = 6\boldsymbol{kHz}$$

$$\boldsymbol{C}_1 = \boldsymbol{C}_2 = 2.5\boldsymbol{nF};$$

$$\boldsymbol{R}2 = \frac{1}{\boldsymbol{\omega} * \boldsymbol{C}} = \frac{1}{2\boldsymbol{pif} * \boldsymbol{C}} = 10.6\boldsymbol{k\Omega}$$

$$\boldsymbol{R}_2 = \boldsymbol{R}_4 = 10.6\boldsymbol{k\Omega}$$

$$\boldsymbol{R}_1 = \boldsymbol{Q} \cdot \boldsymbol{R}_2 = 1 \cdot 10.6 = 10.6\boldsymbol{k\Omega};$$

$$\boldsymbol{R} = \frac{\boldsymbol{R}_1}{\boldsymbol{H}_0} = 10.6\boldsymbol{k\Omega};$$

And for the value of R3 I chose :$\boldsymbol{R}3 = 10.6\boldsymbol{k\Omega}$

2.3. Stage 3

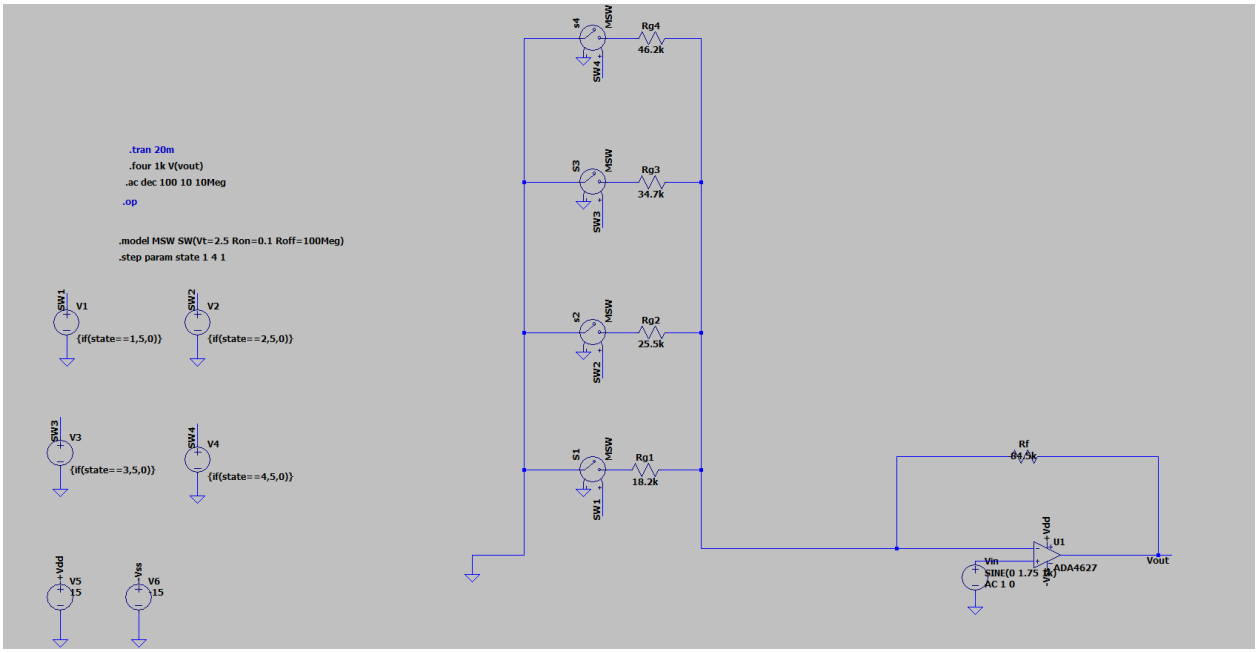

Figure (8): PGA

Stage 3 is designed to provide variable amplification using a non-inverting topology to adjust the signal level before the final stage.This stage must provide **4 gain steps** starting from **9 dB** to **15 dB** with a resolution (step) of **2 dB.**

The feedback resistor is $\boldsymbol{Rf} = 84.5\boldsymbol{k\Omega}$
The gain resistors Rg1, Rg2, Rg3, Rg4 are calculated to satisfy the gain requirements:

$$\boldsymbol{Av} = 1 + \frac{2\boldsymbol{Rf}}{\boldsymbol{Rg}}$$

To find the required linear gain from the decibel values, we use: $Av = 10^{\frac{GdB}{20}}$

- for **9dB:**

$$Av = 10^{\frac{9dB}{20}} = 2.818$$

$$\boldsymbol{Rg}4 = \frac{\boldsymbol{Rf}}{\boldsymbol{Av}-1} = \frac{84.5}{2.8-1} = 46.2\ \boldsymbol{k\Omega}$$

- for **11 dB:**

$$Av = 10^{\frac{11dB}{20}} = 3.548$$

$$\boldsymbol{Rg}3 = \frac{\boldsymbol{Rf}}{\boldsymbol{Av}-1} = \frac{84.5}{3.5-1} = 34.7\ \boldsymbol{k\Omega}$$

- for **13 dB:**

$$Av = 10^{\frac{13dB}{20}} = 4.467$$
$$\boldsymbol{Rg}2 = \frac{\boldsymbol{Rf}}{\boldsymbol{Av}-1} = \frac{84.5}{4.5-1} = 25.5\ \boldsymbol{k\Omega}$$

- for **15dB:**

$$Av = 10^{\frac{15dB}{20}} = 5.623$$
$$\boldsymbol{Rg}1 = \frac{\boldsymbol{Rf}}{\boldsymbol{Av}-1} = \frac{84.5}{5.6-1} = 18.2\boldsymbol{k\Omega}$$

To automate the gain selection, I implemented four individual control batteries(V_1 to V_4). Each battery operates one switch using an IF-statement logic: the voltage of each battery is set to {if(state==n, 5, 0)} (where n is the step number).

In a non-inverting amplifier, the smallest resistor **(Rg1=** $18.2\boldsymbol{k\Omega}$ provides the **highest gain** (15 dB), while the largest resistor ($\boldsymbol{Rg}4 = 46.2\ \boldsymbol{k\Omega}$) provides the **lowest gain** (9 dB).

2.4. Stage 4

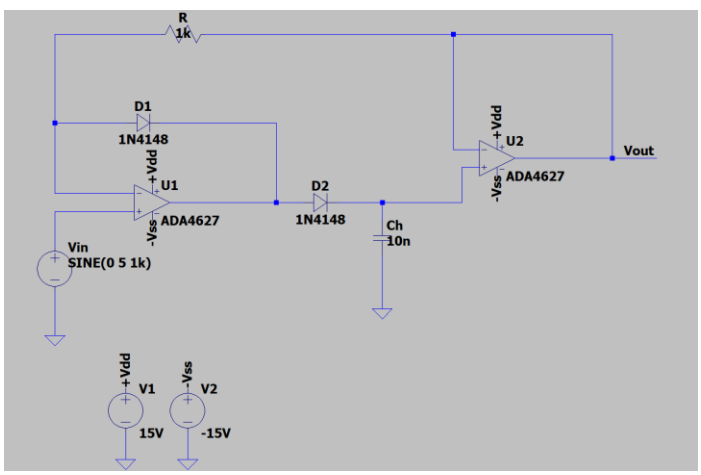

Figure (9): Precision Positive Peak Detector

The final stage is a **Precision Positive Peak Detector**. Its primary function is to capture and hold the maximum voltage of the processed **6kHz** signal with a linear gain of **1**.

The value of the hold capacitor **Ch=10nF** was dimensioned based on the charging current capabilities of the **ADA4627** and the signal frequency , ensuring that the unitary gain requirement is maintained with high precision during the hold phase.

The resistor **R=1kΩ** is integrated into the feedback path to address the stability challenges in high-speed peak detectors.

The **1N4148** diodes were selected for their low parasitic capacitance and ultra- fast reverse recovery time .

3. Simulation results

3.1. Instrumentation Amplifier with Passive Current Feedback

3.1.1. Operating Point

The Output Voltage (Voutd)$= -0.000355577\boldsymbol{V}$ is one of the most important result in my analysis.

It shows that the output is nearly 0V. This indicates that my **DC offset compensation** is working perfectly, and the two branches of my differential pair are well-balanced. (+52mV, -52mV)

Also the V+ and V- have the values +15V and -15V, which results that the OpAmp is correctly supplied.

```
--- Operating Point ---

V(+v):          15              voltage
V(-v):          -15             voltage
V(c):           10.4937         voltage
V(e):           -0.650467       voltage
V(n001):        10.4934         voltage
V(n002):        0               voltage
V(n003):        0               voltage
V(n004):        -0.650468       voltage
V(outd):        -0.000355577    voltage
```

Figure (10): Operating point of the 1st stage

The DC compensation in Stage 1 is achieved by injecting a reference voltage.

For the value of **Vref**, I equaled **VA** and **VB** to 0 and then I simulated Vout , the value of Vref being this value with minus Vref=0.000355577 .

This calibration ensures high DC accuracy and maximum signal headroom for the following filter and programmable gain stages.

3.1.2. AC

The simulation shows a low-frequency gain of approximately 16.995721 [V/V] (≈17), in accordance with the specifications. I used the “.ac dec 100 1 10meg” .

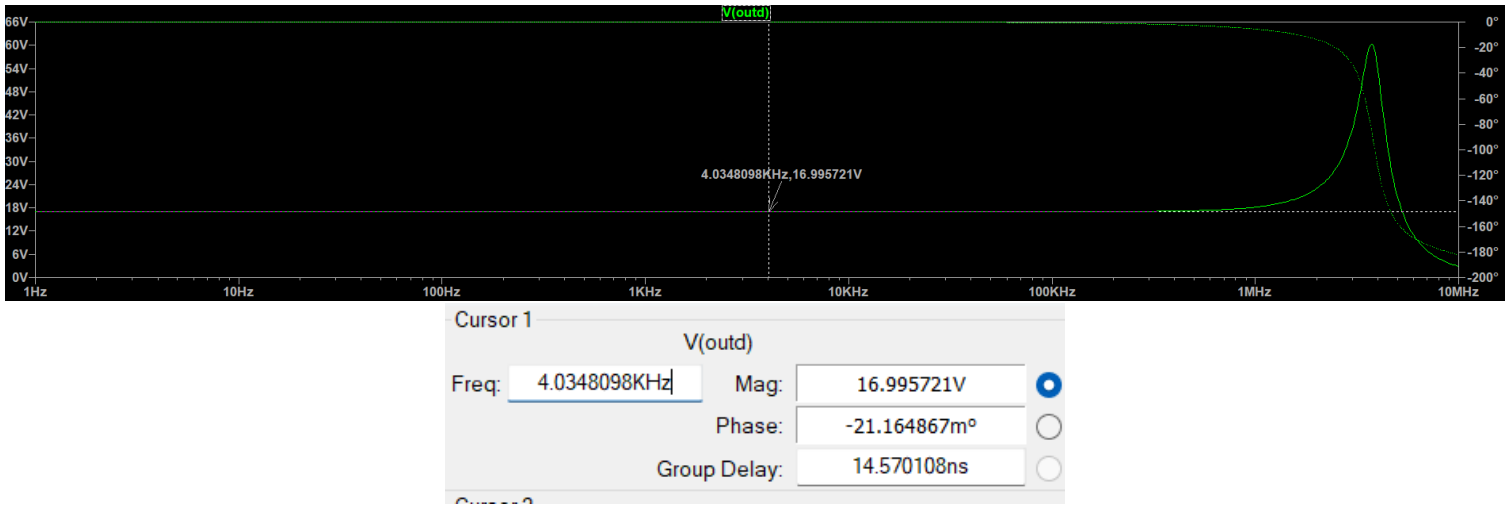

Figure (11): Gain at low frequency

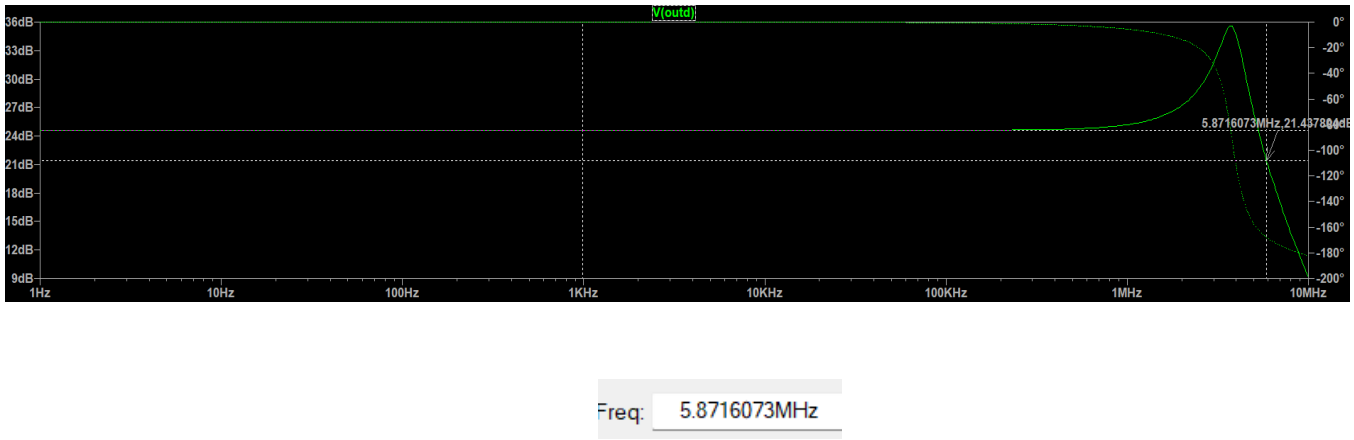

Figure (12): BW >Bw filter

The first cursor indicate a magnitude of Av=24.60dB which is approximately equal to the converted linear gain of Av=17. The second cursor shows the -3db cutoff frequency.

BW= 5.8716073MHz> Bw filter= 6kHz.

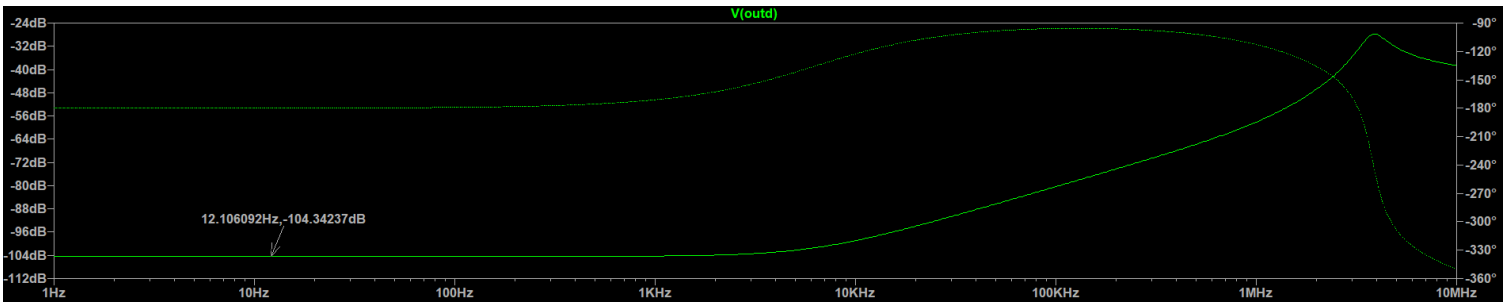

Figure (13):CMRR

To evaluate the **CMRR** , an identical AC signal of 1V was applied to both inputs VA and VB , the result is shown in the next picture where we can see that the gain is at -104.34dB

$$\boldsymbol{CMRR = Ad - AdCMRR} = 24 + 104.34 = 128.34\boldsymbol{dB}$$

This value represents a correct behavior that aligns perfectly with the technical specifications of the **ADA4627 datasheet**.

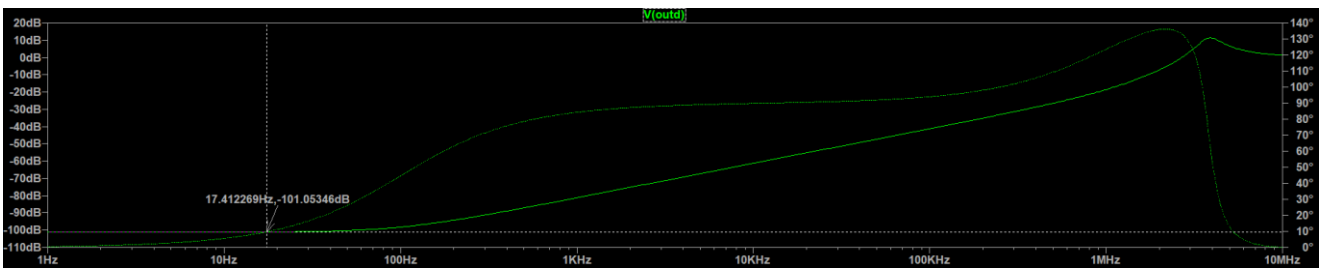

Figure (14):PSRR

To evaluate the **PSRR**, an identical AC signal of 1V was applied to both inputs V+ and V- , the result is shown in the next picture where we can see that the gain is at -101.05dB

$$\boldsymbol{PSRR = Ad - AdPSRR} = 24 + 101.05 = 125.05\boldsymbol{dB}$$

3.1.3. Transient

PULSE(0 1 1u 1n 1n 10u 20u 50)

The Slew Rate (SR) is calculated as: $SR = \frac{\Delta Vout}{\Delta t}$

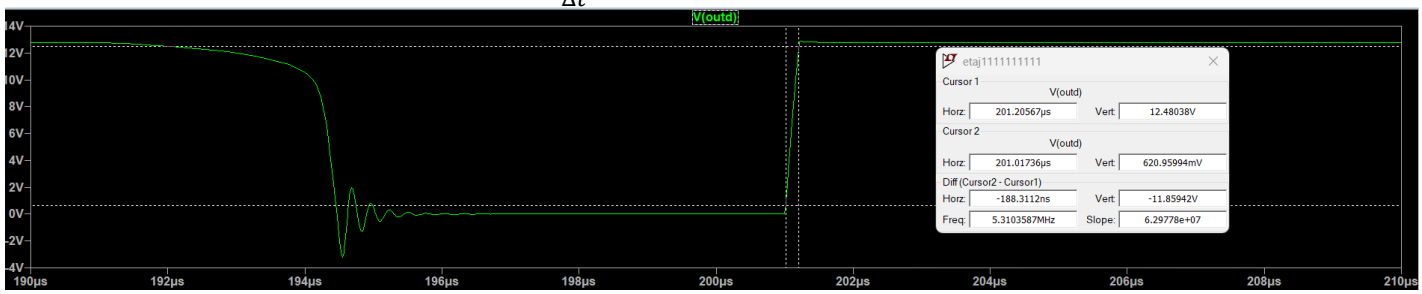

Figure (15): SR

$$\boldsymbol{SR} = \frac{11.85\boldsymbol{V}}{188.31\boldsymbol{ns}} = 62.92\frac{\boldsymbol{V}}{\boldsymbol{us}}$$

The Slew Rate was measured using the cursor difference between the 10% and 90% points of the output signal.

This measured Slew Rate confirms that the **ADA4627** operational amplifier is operating at high speed

```
Fourier components of V(outd)
N-Period=1
DC component:-0.000391585

Harmonic            Frequency            Fourier            Normalized          Phas
 Number               [Hz]              Component            Component         [degr
    1               1.000e+03           1.765e+00           1.000e+00            90
    2               2.000e+03           9.474e-05           5.366e-05          -164
    3               3.000e+03           6.876e-05           3.895e-05            98
    4               4.000e+03           3.373e-05           1.911e-05           -21
    5               5.000e+03           1.086e-04           6.153e-05           112
    6               6.000e+03           4.679e-05           2.651e-05            15
    7               7.000e+03           2.077e-05           1.176e-05          -170
    8               8.000e+03           1.091e-04           6.178e-05            30
    9               9.000e+03           1.673e-05           9.475e-06           -74
Partial Harmonic Distortion: 0.011530%
Total Harmonic Distortion:   0.050239%
```

Figure (16): THD for the 1st stage

The Fourier analysis results indicate a **THD=0.050239%** confirming the high linearity of the system. This value is significantly lower than the standard threshold required in the performance specifications, proving that the amplification and filtering stages (Stage 1 and 2) preserve signal integrity without introducing parasitic spectral components. This confirms that the amplifiers operate in a stable linear regime across the full amplitude of the input signal

3.2. Tow-Thomas Band-Pass Filter

3.2.1. Operating Point

The simulation shows that the circuit is properly biased. The quiescent output voltages are negligible (in the microvolt and nanovolt range), indicating that there are no saturation issues (the outputs are not railed to

+15Vor -15V) and that means that is stable.

```
--- Operating Point ---

V(n001):        -0.000292312   voltage
V(n002):        -0.000584622   voltage
V(n003):        -0.000292313   voltage
V(n004):        -0.00029231    voltage
V(n005):        0              voltage
V(out_tb):      -0.000292478   voltage
V(out_tj):      -1.62981e-07   voltage
V(vcc):         15             voltage
V(vee):         -15            voltage
```

Figure (17): Operating Point of the 2nd stage

3.2.2. AC

An .ac dec 100 10 100k analysis was performed to verify the pass-band gain H_0 from my specifications. The simulation confirms a pass-band gain of approximately 1 [V/V] (0 dB) and a cutoff frequency of 6 kHz, in accordance with the specifications.

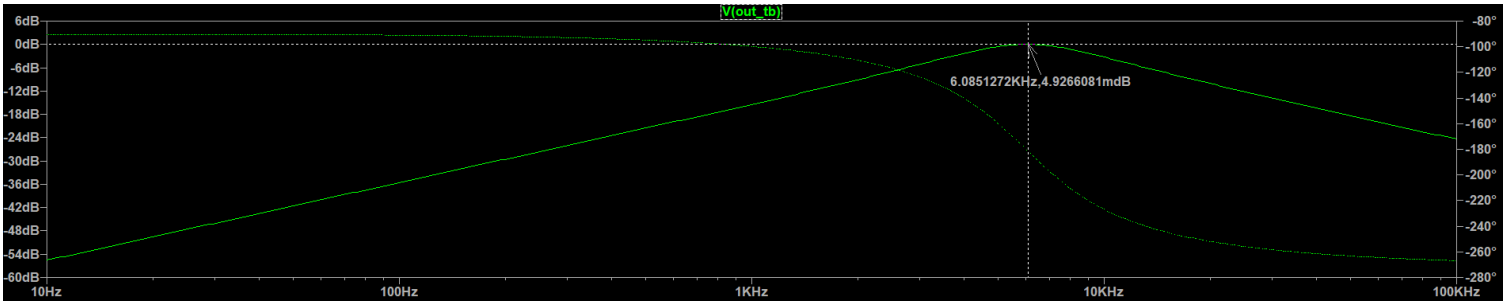

Figure (18): H0 liniar=1[V/V](0 dB)

The measurements performed using the cursor confirm the design specifications. By positioning the cursors at the -3dB attenuation points a measured bandwidth of **6.069 kHz** is obtained, validating the 6 kHz specification.

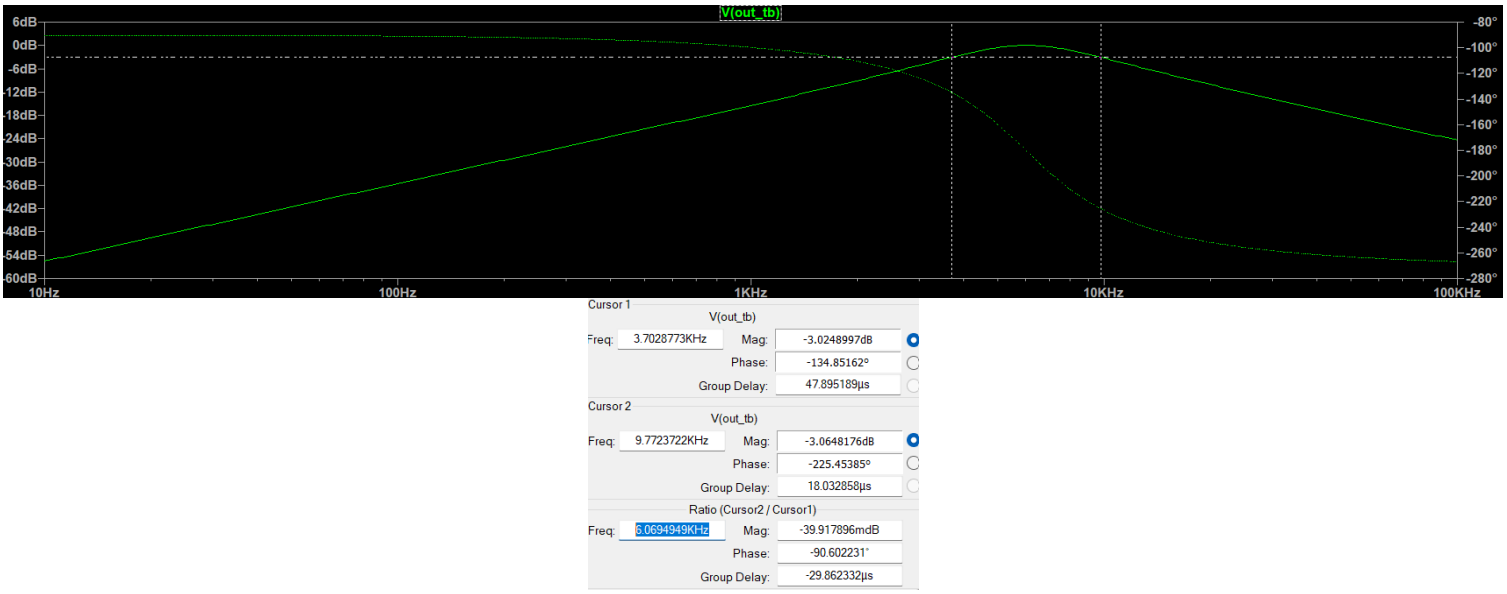

Figure (19): BW of the Filter=6k

3.2.3. Transient

Transient Analysis (.tran 50m) combined with the Fourier directive (.four 1k V(out_tj)) is the standard method for quantifying circuit linearity. Linearity is measured via THD (Total Harmonic Distortion). A lower THD indicates a more linear circuit that introduces fewer "impurities" into the signal.

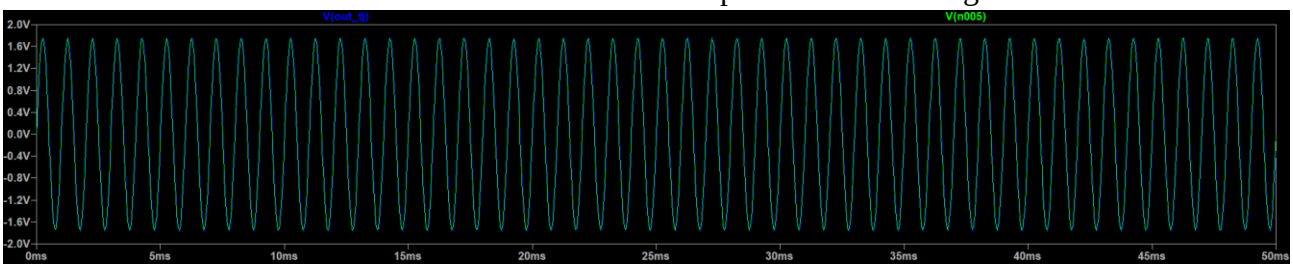


```
Fourier components of V(out_tj)
N-Period=1
DC component:8.94028e-05

Harmonic     Frequency     Fourier     Normalized    Phase       Normalized
 Number        [Hz]       Component    Component   [degree]     Phase [deg]
    1        1.000e+03    1.765e+00    1.000e+00     99.76Â°       0.00Â°
    2        2.000e+03    1.074e-04    6.081e-05    -58.40Â°    -158.16Â°
    3        3.000e+03    3.305e-03    1.872e-03    -28.55Â°    -128.30Â°
    4        4.000e+03    2.560e-04    1.450e-04    -28.89Â°    -128.65Â°
    5        5.000e+03    4.225e-03    2.393e-03    142.51Â°      42.75Â°
    6        6.000e+03    2.089e-04    1.183e-04     67.09Â°     -32.67Â°
    7        7.000e+03    1.110e-03    6.289e-04      0.65Â°     -99.11Â°
    8        8.000e+03    2.735e-04    1.549e-04    -80.59Â°    -180.35Â°
    9        9.000e+03    1.299e-03    7.355e-04   -175.09Â°    -274.85Â°
Partial Harmonic Distortion: 0.319874%
Total Harmonic Distortion:   0.419630%
```

Figure (20): THD for the 2nd stage

The sub-unity THD value=0.419630 % (< 0.5) demonstrates excellent linearity for the active filter. The circuit faithfully reproduces the input signal without introducing significant parasitic spectral components, validating the linearity specification

3.3. Programmable Gain Amplifier (PGA)

3.3.1. Operating Point

The control voltages show that the selection logic is functioning correctly (Switch 1 is active with 5V, while others are at 0V), and the operational amplifier is correctly supplied $\pm 15V$. The output voltage is approximately 0V .

```
--- Operating Point ---

V(+vdd):        15              voltage
V(-vss):        -15             voltage
V(n001):        -0.00029217     voltage
V(n002):        -0.000292305    voltage
V(n003):        -0.000292204    voltage
V(n004):        -0.000292231    voltage
V(n005):        -1.60606e-09    voltage
V(n006):        0               voltage
V(sw1):         5               voltage
V(sw2):         0               voltage
V(sw3):         0               voltage
V(sw4):         0               voltage
V(vout):        -0.00165148     voltage
```

Figure (21): Operating Point of 3rd stage

3.3.2. AC

The AC analysis plot confirms that the four required gain steps—9, 11, 13, and 15 dB—were successfully implemented. These results prove that the calculated values for the parallel resistor network are accurate and meet the project specifications

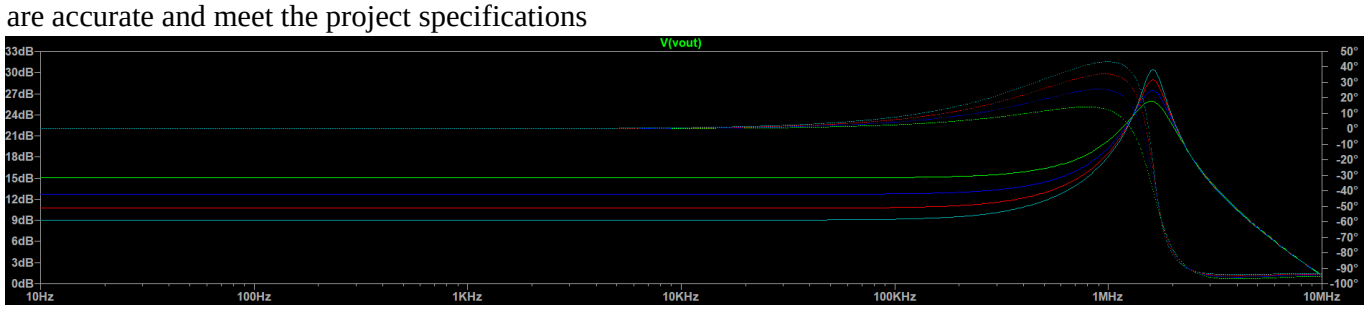

Figure (22): Configuring the testbench for AC analysis of 3rd stage

An AC analysis **(.ac dec 100 10 10Meg)**to verify the gain stages.

The simulation was automated using the **.step param 1 4 1** directive along with logic expressions such as **{if(p==1, 5, 0)}** applied to the switch control sources.

Table (3): PGA measured vs. required values comparison

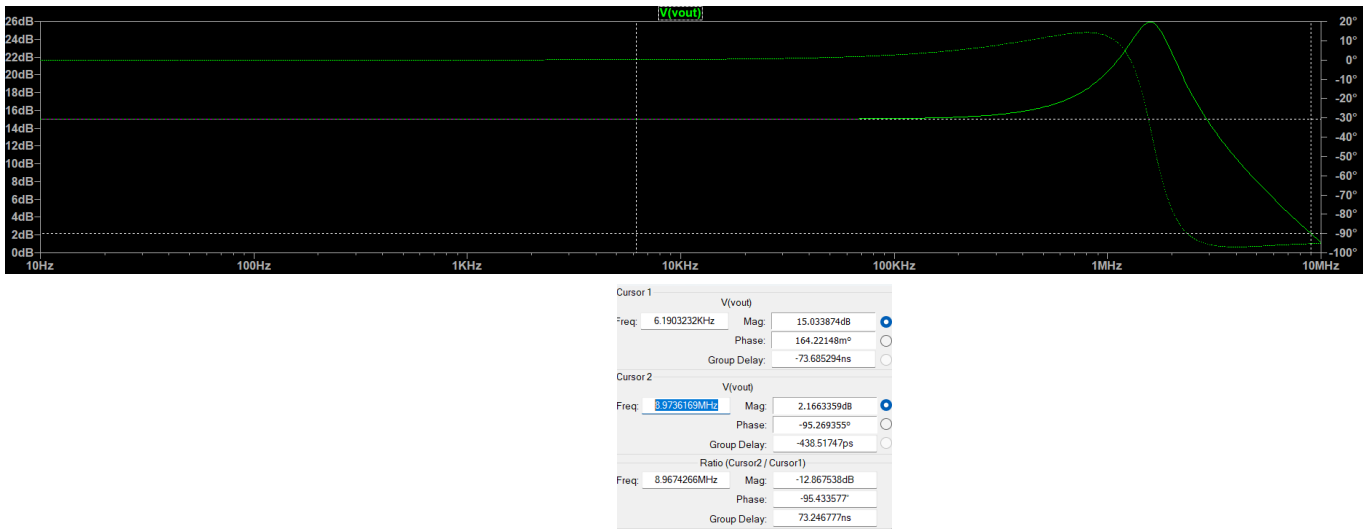

Figure (23): BW for gain 15dB(8.9736169MHz)> BW of the filter(6kHz)

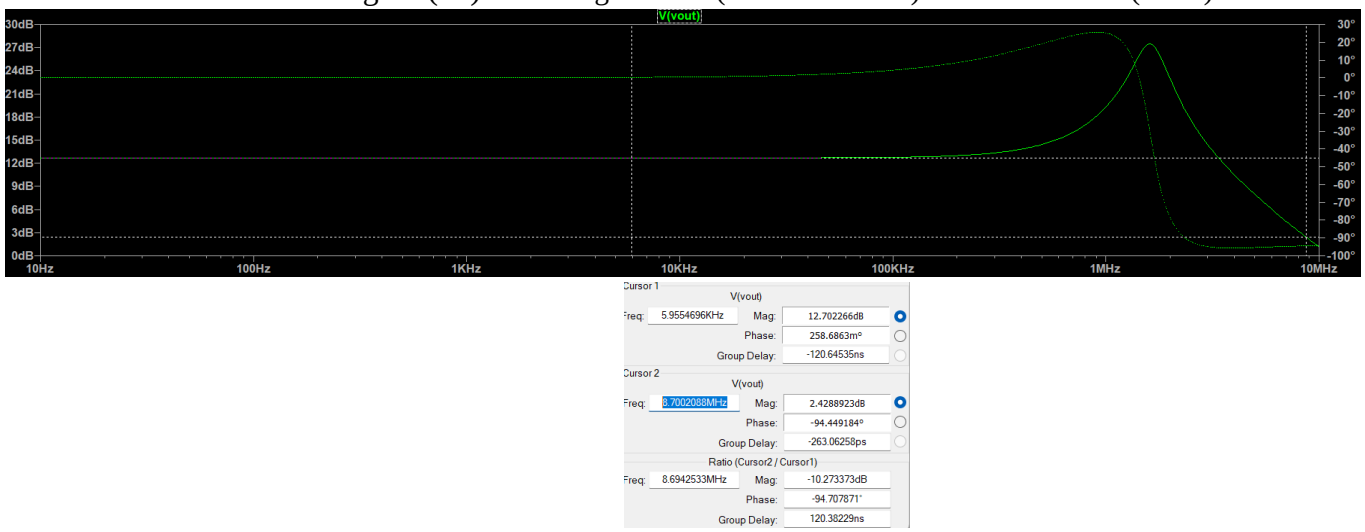

Figure (24): BW for gain 13dB(8.700208MHz)> BW of the filter(6kHz)

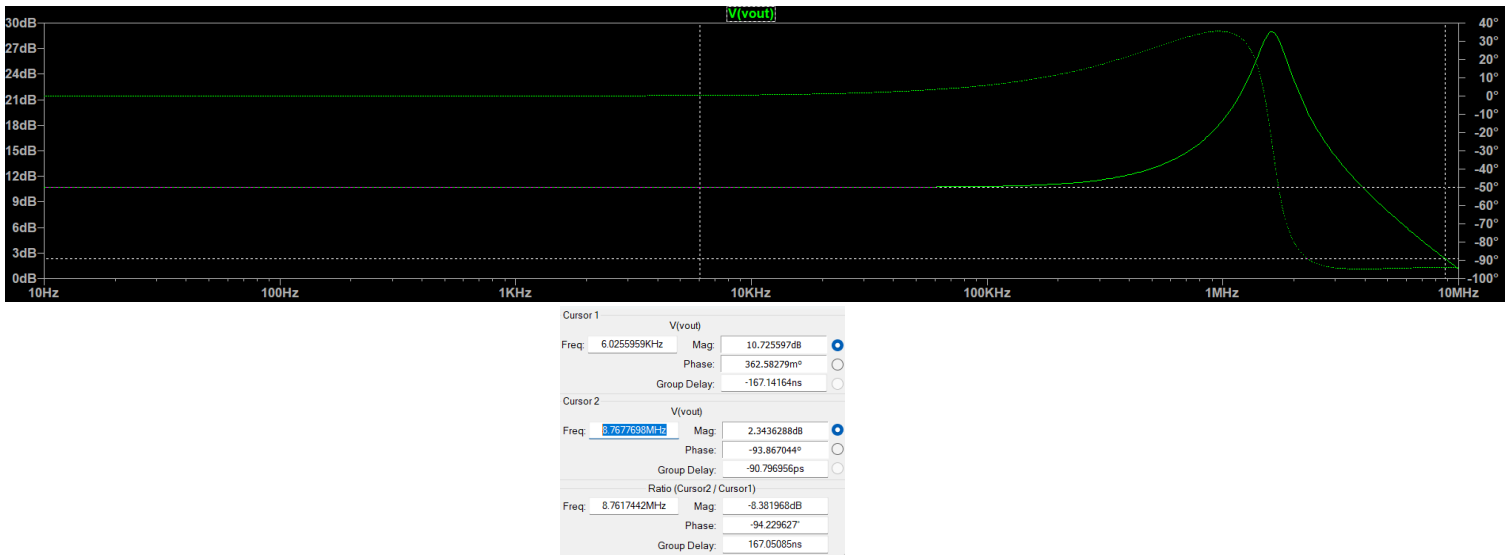

Figure (25): BW for gain 11dB(8.7677698MHz)> BW of the filter(6kHz)

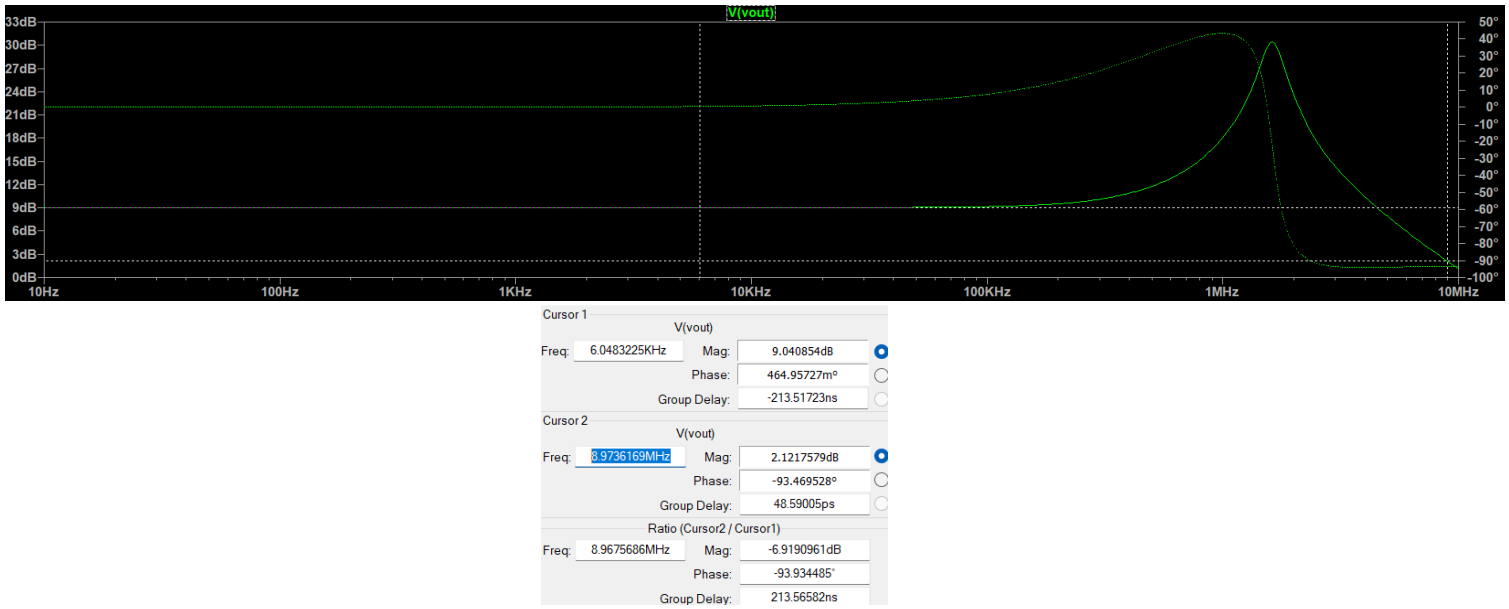

Figure (26): BW for gain 9dB (8.9736169MHz)> BW of the filter(6kHz)

3.3.3. Transient

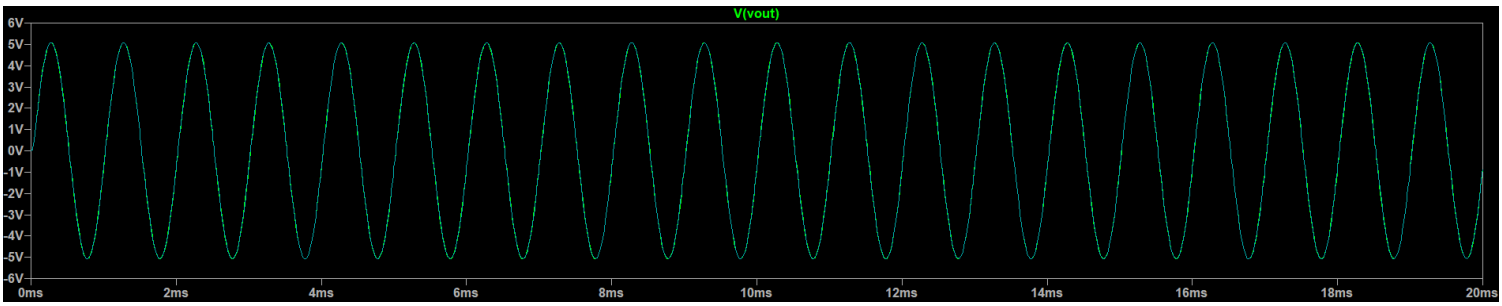

Figure (27): Amplitude max-Gain min

The simulation for **Maximum Amplitude / Minimum Gain** confirms the system's dynamic range stability. With a 104mV input and a total system gain of approximately 33.6 dB (calculated as 20log(17)+9dB =>24.6+9=33.6dB) the output is a clean **5V peak sine wave**.

```
Fourier components of V(Vout)
N-Period=1
DC component:-0.000840562

Harmonic          Frequency          Fourier          Normalized          Phas
 Number             [Hz]            Component          Component         [degr
    1              1.000e+03         4.949e+00          1.000e+00           89
    2              2.000e+03         3.697e-05          7.471e-06           23
    3              3.000e+03         7.815e-05          1.579e-05            6
    4              4.000e+03         2.443e-05          4.935e-06          179
    5              5.000e+03         1.027e-04          2.076e-05           57
    6              6.000e+03         3.215e-05          6.497e-06           14
    7              7.000e+03         5.915e-05          1.195e-05           44
    8              8.000e+03         2.764e-05          5.586e-06         -176
    9              9.000e+03         1.019e-04          2.059e-05           86
Partial Harmonic Distortion: 0.003742%
Total Harmonic Distortion:   0.044088%
```

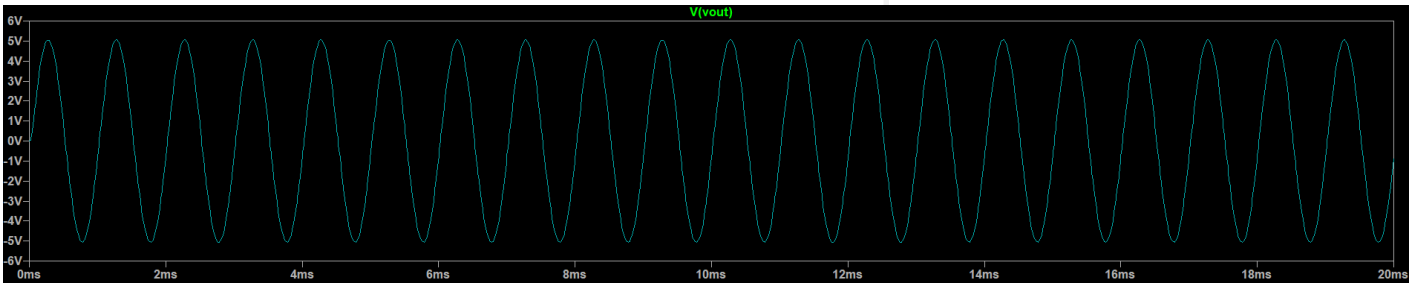

Figure (28): Amplitude min-Gain max

The simulation for **Minimum Amplitude / Maximum Gain** validates the system's sensitivity and normalization capability. The lack of distortion confirms that the **ADA4627** provides sufficient bandwidth and linearity even at its highest gain settings.

```
Fourier components of V(Vout)
N-Period=1
DC component:-0.000840562

Harmonic     Frequency     Fourier     Normalized    Phase       Normalized
 Number        [Hz]       Component    Component   [degree]     Phase [deg]
    1        1.000e+03    4.949e+00    1.000e+00     89.92Â°       0.00Â°
    2        2.000e+03    3.697e-05    7.471e-06     23.60Â°     -66.32Â°
    3        3.000e+03    7.815e-05    1.579e-05      6.95Â°     -82.97Â°
    4        4.000e+03    2.443e-05    4.935e-06    179.36Â°      89.44Â°
    5        5.000e+03    1.027e-04    2.076e-05     57.22Â°     -32.70Â°
    6        6.000e+03    3.215e-05    6.497e-06     14.94Â°     -74.98Â°
    7        7.000e+03    5.915e-05    1.195e-05     44.47Â°     -45.46Â°
    8        8.000e+03    2.764e-05    5.586e-06   -176.89Â°    -266.81Â°
    9        9.000e+03    1.019e-04    2.059e-05     86.00Â°      -3.92Â°
Partial Harmonic Distortion: 0.003742%
Total Harmonic Distortion:   0.044088%
```

3.3.4. Precision Positive Peak Detector

3.3.5. Operating Point

The result of performing a ".op" analysis is illustrated .

```
       --- Operating Point ---

V(+vdd):        15              voltage
V(-vss):        -15             voltage
V(n001):        -0.000292312    voltage
V(n002):        -0.000270978    voltage
V(n003):        -1.68168e-08    voltage
V(n004):        0               voltage
V(vout):        -0.000292329    voltage
```

Figure (29): Operating Point of 4th stage

3.3.6. DC

The DC transfer characteristic exhibits a linear dependency between input and output. Cursor measurement at a high operating point (Vin=12.8V) and (Vout=12.8) indicates an output voltage nearly identical to the input, resulting the gain H0=1.This confirms the voltage follower behavior of the peak detector's output stage.

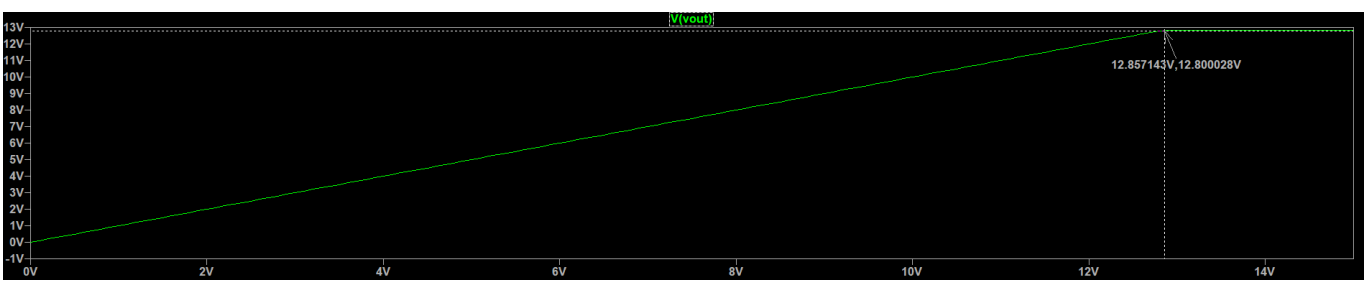

3.3.7. Transient

The simulation proves that the circuit functions as an **ideal peak detector**. It accurately captured the 5V peak of the input signal and maintained it without any visible voltage drop or signal decay.

The graph displays a continuous DC output signal exactly equal to the maximum positive amplitude of the input signal, which matches the precise definition of a **Positive Peak Detector's** transfer function

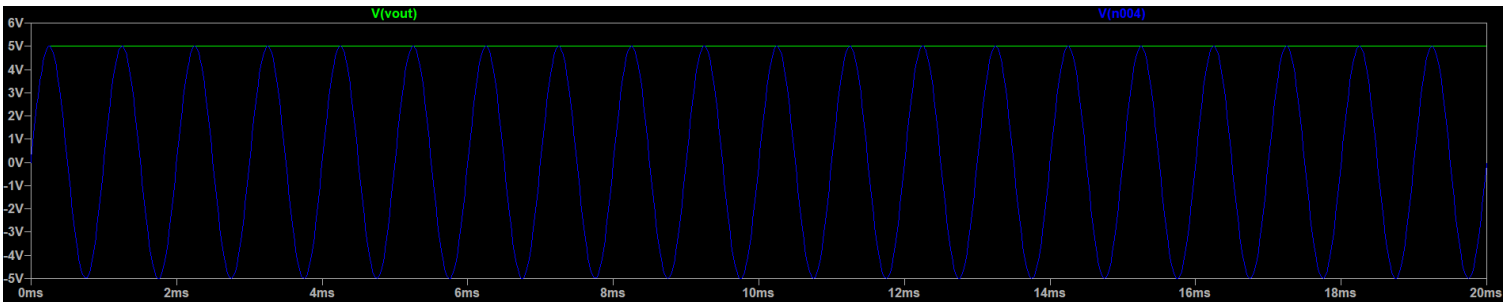

Figure (31):Implementation of the circuit function

To demonstrate that the operating range exceeds the design specifications , the maximum input amplitude was determined trough back-calculation , starting from the power supply voltage of 15V.

$$Vout3 = \frac{Vout4}{gain} = \frac{15}{1} = 15V$$

$$Vout2 = \frac{Vout3}{gain} = \frac{15}{2.81} = 5.33V$$

$$Vout1 = \frac{Vout2}{gain} = \frac{5.33}{1} = 5.33V$$

$$Vin = \frac{Vout1}{gain} = \frac{5.33}{17} = 0.314V = 314mV$$

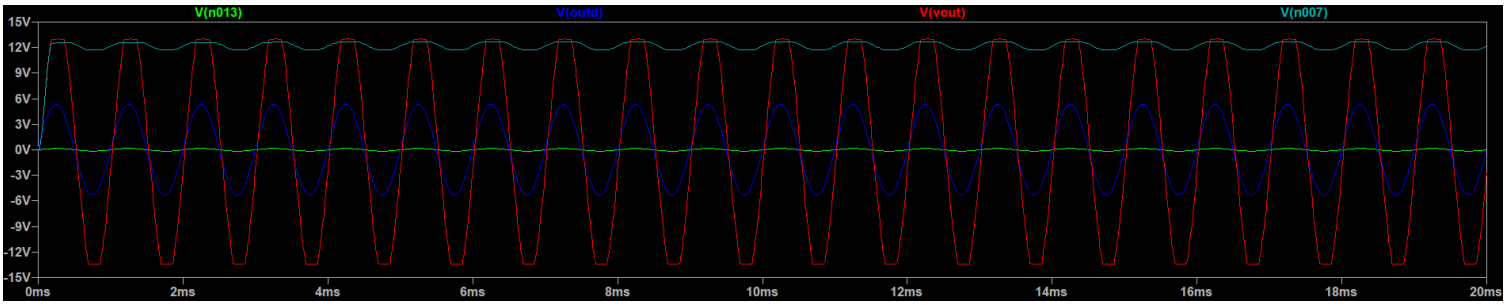

The full-system simulation validates the operational range of the circuit, confirming its ability to process input signals from **52.3mV to 104mV**. The primary significance of these results lies in the successful **signal normalization** provided by the PGA stage, which maintains a stable **5V peak output** across the entire input range. The simulation confirms that the operating signal remains well within the **+13.5V and -13.5V** linear swing of the ADA4627 operational amplifiers. This ensures a robust and reliable performance for high-fidelity signal processing applications

4. Digital Interface Integration and Performance summary

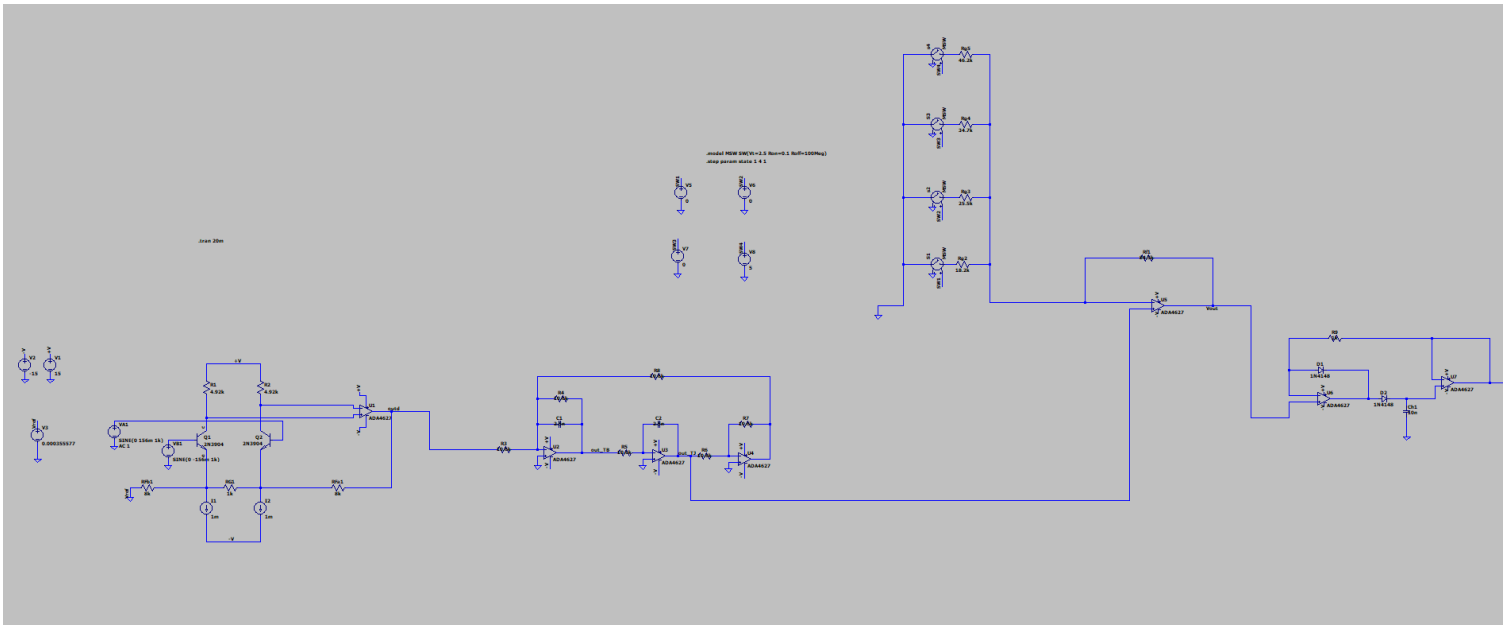

Figure (33): Full circuit

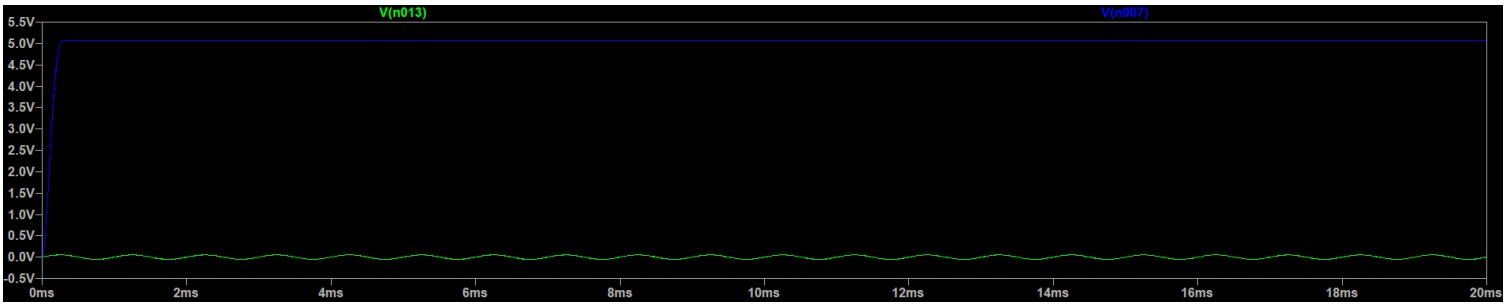

To conclude the design validation, a global simulation of the complete signal conditioning chain was performed. This final test integrates all four stages—**Differential Preamplifier, Tow-Thomas Active Filter, Programmable Gain Amplifier (PGA), and Precision Peak Detector**—to verify the end-to-end system performance.

The system was stimulated with a **1 kHz** sine wave input to simulate a low-level sensor output. The signal is processed through the filtering and amplification stages (achieving a gain of 15 dB), and the final output settles rapidly to a stable **DC voltage of 10.0 V**.

Multiplying the input by the gain results the amplified peak voltage:

$$Vpeak = 1.75V * 5.62 = 10V$$

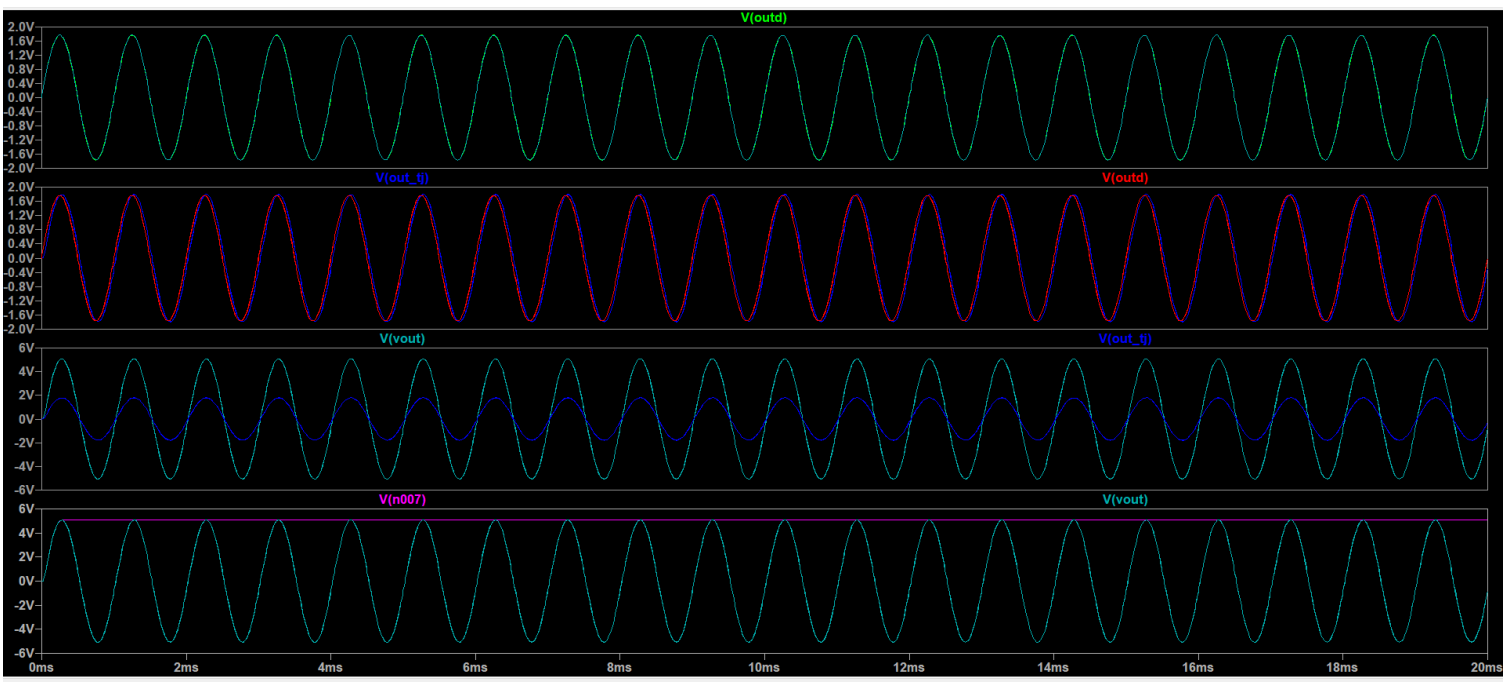

Figure (34): Transient for maximum amplitude and minimum PGA gain

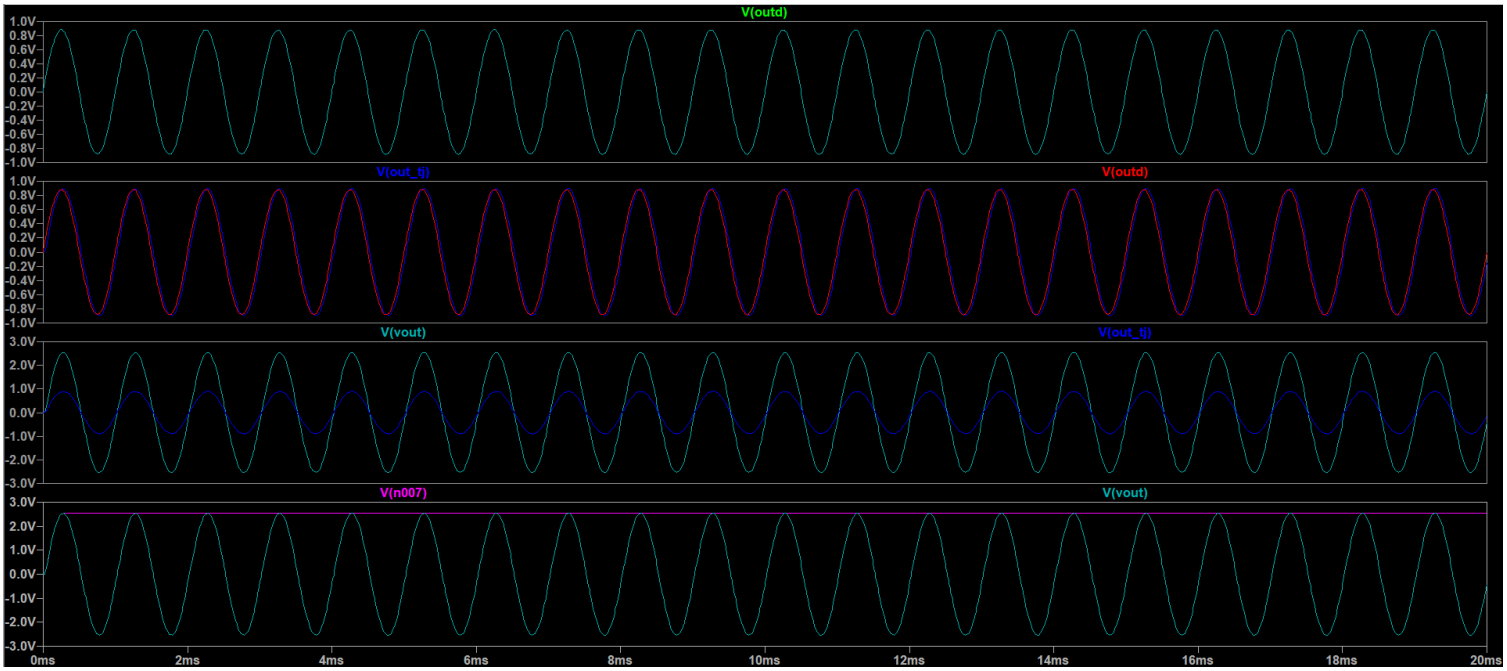

Figure (35): Transient for minimum amplitude and maximum PGA gain

5. Conclusion

Category	Stage1 (Av)	Stage2 (fc)	Stage2 (Q)	Stage2 (H0)	Stage3 (Av1)	Stage3 (Av2)	Stage3 (Av3)	Stage3 (Av4)	Stage4 (H0)
Unit	V/V	kHz	-	V/V	dB	dB	dB	dB	V/V
Specifications	17	6	1	1	9	11	13	15	1
Measured	16.995	6.006	1	1.013	9.420	10.725	12.702	15.033	1.004
Difference (%)	0.03%	0.10%	0.00%	1.30%	4.67%	2.5%	2.29%	0.22%	0.4%

While the **4.67% error** in the first PGA step is the highest recorded, it remains comfortably below the standard **5% engineering tolerance limit**, ensuring reliable gain control.

The designed circuit is fully compliant with all operational conditions and design constraints. It provides stable amplification, precise selective filtering at 6kHz and efficient programmable gain control. The use of high-performance

components and rigorous feedback network calculations allowed for results that completely validate the proposed technical solution.